PRODUCT CATALOG

WAT

CONTENT

TECHNICAL DOCUMENTATION 06

Production Site 4
Sustainability 5
Certifications and Declarations 6
International Standards 7
Insulation Classification 8
Degree of Protection 8
Vibration/Balancing 9
Environmental Conditions 9
Electrical Connections 10
Voltage & Frequency 10
Tolerances 11
Mounting Arrangements 12
Bearings 13
Lubrication 14
Painting 15
Feet 15
Terminal Box 15
Drain/Condensation Holes 15
Motor Identification Symbols 16
Permissible Radial Loads 18
Permissible Axial Loads 19
Duty-Type 20
Induction Motors Fed by Inverter 21
Efficiency 22

THREE PHASE ALUMINIUM MOTORS 24

Electrical Characteristics IE4 26
Dimensions IE4 28
Electrical Characteristics IE3 36
Dimensions IE3 42
Electrical Characteristics N Series 60
Dimensions N Series 61
Electrical Characteristics IE2 66
Dimensions IE2 67

THREE PHASE CAST IRON MOTORS 72

Electrical Characteristics IE3 74
Dimensions IE3 75

SMOKE EXTRACTION MOTORS 82

F300 Series Electrical Characteristics 84
F300 Series Dimensions 88
F400 Series Electrical Characteristics 91
F400 Series Dimensions 95

BRAKE MOTORS 98

Technical Documentation 100
Electrical Characteristics 101
Dimensions 102
Brake Kit 106
Brake Kit Nomenclature 107
Brake Kit Dimensions 111

SINGLE PHASE MOTORS 114

Technical Documentation 116
Electrical Characteristics (QM Series) 117
Dimensions (QM Series) 118

120 MOTOR PARTS LIST

124

125 MANAGEMENT OF WASTE MOTORS AND PARTS

PRODUCTION SITE

WAT Motor Sanayi ve Ticaret A.Ş. performs manufacturing operations at its factory in Çerkezköy, Tekirdağ. WAT Motor Sanayi ve Ticaret A.Ş. manufactures various kinds of three phase and single phase motors with up to date technology in a closed area of 20.000m^2.

With a team of engineers, expert on electrical motors, the plant provides the users with necessary technical consultancy services, and offers a product range including three-phase asynchronous motors in 40.000 different versions and single-phase asynchronous motors in 500 different versions.

With the purpose of launching products beyond customer expectations, new technologies are closely followed and adapted in the plant. To convey product design into the production lines more quickly computer assisted production technology and concurrent engineering methods are being used.

Exporting more than half of its production, export leader WAT Motor Sanayi ve Ticaret A.Ş. expands its customer range with its continuous and competitive quality policies. Continuous follow-up customer demands and complaints is considered main instrument for product development and customer satisfaction. Thanks to the advantage of long term relationships with customers-producers and dealers, the plant increases competitive power for both itself and the customers.

SUSTAINABILITY

As a signatory to the United Nations Global Compact, Koç Holding abides by the 10 Principles of the UN Global Compact. WAT Motor Sanayi ve Ticaret A.Ş., a subsidiary of the Holding, adopts these Principles and strengthens its sustainability structure every day for compliance.

WAT's Sustainability Vision

As WAT Motor, we focus on sustainable development and value creation with our principle of respect for people and the environment. In our journey with the slogan "You are in the power of this transformation", we take an active role in projects that add value to society with our business model that puts environmental sustainability at its center. In this context:

- With our sustainability approach, we focus on the needs of the environment, our business and people.
- We support gender equality, increase women's employment and provide equal career opportunities. We care about the needs of our stakeholders with our diversity approach.
- By producing energy efficient motors, we conserve natural resources and reduce our carbon footprint.
- With global trends and our innovative perspective, we improve our production and meet consumer needs.
- We take the lead on issues important to the world and society by developing innovative methods and collaborations, and we move our business forward by acting with courage.
- We evaluate our environmental footprint and strive to minimize our impact.
- We aim for sustainable and profitable growth and develop business models that will create efficient and long-term value.
- In parallel with our sustainability approach, we direct our efforts to realize our SMART targets set in line with the Sustainable Development Goals.

Sustainable Development Goals

Sustainability Strategies

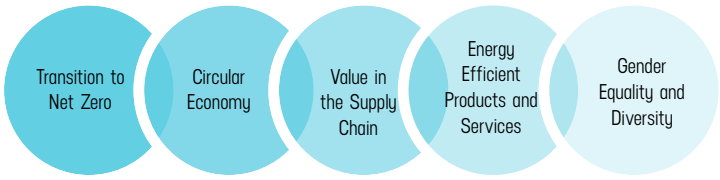

- Energy efficiency
- 100% green electricity supply
- Reduction of chemical consumption
- Renewable energy systems
- Developing innovative designs focused on circular economy in the product
- Industry and mobility collaborations to promote energy efficiency
- Transition to highly energy efficient motors
- Development, implementation and continuous improvement of an ESG Development Program for sustainable development throughout the supply chain
- Global standardization of the WAT Green Chemistry Management System in products and production
- Increasing energy efficient motor production
- Reducing raw material consumption
- LCA-based design
- Green mobility incentive
- Increasing women's employment
- Ensuring ergonomic working conditions
- Talent management
- Digitalization of training activities

2030 CARBON REDUCTION TARGETS → **2050 NET ZERO EMISSION TARGET**

Climate Change Program: Grade B

(Management group: above its sector and global average)
Water Security Program: A- Grade
(Leadership group: above its sector, global and European average)

Bronze Medal from EcoVadis

WAT ranked in the top 35% of all companies entering the EcoVadis rating, in the top 23% in its sector, and in the top 12% in the sustainable procurement theme.

WAT has many internationally recognized standards/certificates in the field of sustainability and carries out activities in compliance with its standards. ISO 14001 Environmental Management System, ISO 14064-1 Greenhouse Gas Inventory, ISO 50001 Energy Management System, ISO 45001 Occupational Health and Safety Management System, ISO 31001 compliant WERM enterprise Risk Management, ISO 27001 Information Security, Cyber Security and Privacy Protection Management are some of them. It uses closed-loop water systems for its operations and supplies green electricity from renewable sources. It calculates climate and water risks and has net zero targets in line with SBTi (Science Based Targets initiative).

TECHNICAL DOCUMENTATION

INTERNATIONAL STANDARDS

Electric motors are manufactured according to the international standards listed below:

IEC 60034-1	Rating and performance
IEC 60034-2-1	Methods for determining losses and efficiency
IEC 60034-5	Classification of degrees of protection
IEC 60034-6	Methods of cooling
IEC 60034-7	Symbols of construction and mounting arrangements
IEC 60034-8	Terminal markings and direction of rotation
IEC 60034-9	Noise limits
IEC 60034-11	Built-in thermal protection
IEC 60034-14	Vibration limits
IEC 60034-18-1	Functional evaluation of insulation system
IEC 60034-30	Efficiency classes (IE-code)
IEC 60038	Standard voltages
IEC 60072	Dimensions and output series for rotating electrical machines
EN 50347	Dimensions and output for electrical machines
EN 55014-1 EN 61000-3-2 EN 61000-3-3	Electromagnetic compatibility
EN12101-3	Smoke and Temperature Control Systems

Turkey	Germany	Great Britain
TSE EN 60034-1	DIN VDE 0530 DIN EN 60034	BS EN 60034

ENERGY c UL us E235514

Three phase and single phase motor series are complying with UL Efficiency and are available in our standard motor range. Those motors are marked with our certification number E235514 upon request.

c UL us E235514

Safety certification is the process of assessing the compliance of products to recognized safety requirements. Our three phase and single phase motor series are complying with UL Safety. Those motors are marked with our certification number E235514 upon request.

ee CC329B

Three phase and single phase motor series are complying with CC Certification and are available in our standard motor range. Those motors are marked with our certification number CC329B upon request.

TSE TS EN 60034-1 EAC CE SASO

TECHNICAL DOCUMENTATION

INSULATION CLASSIFICATION

Our standard motors have insulation class F while the temperature rise is for Class B ensuring longer service life.

Upon the customer's request, H class insulation motors are manufactured.

Under specified measuring conditions in accordance with IEC 60034-1 standard, insulation class F for an electric motor means that at ambient temperature of 40°C the temperature rise of its windings may be max. 105°C with the additional temperature margin of 10°C.

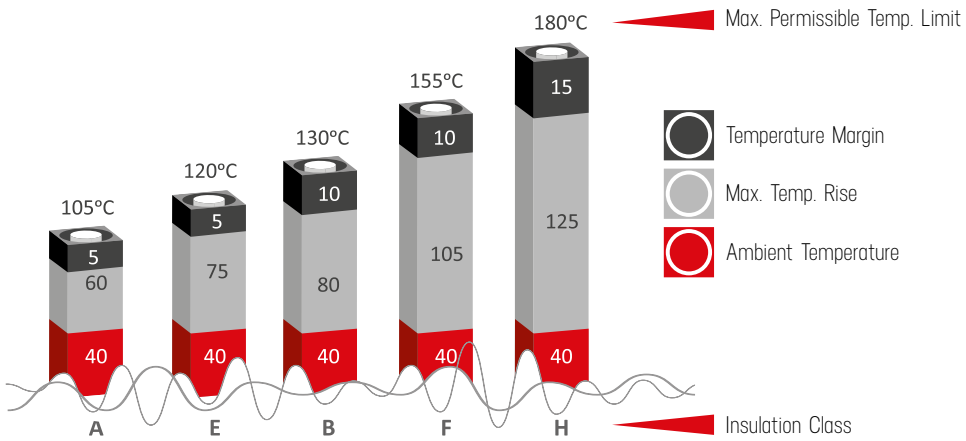

DEGREE OF PROTECTION

According to IEC 60034-5 standard, electric motors are provided with IP code which determines the degree of protection ensured by the housing against access to dangerous parts, introducing foreign matter and/or water.

Most of our motors comply with IP56 protection class as standard.

Please ask for other protection classes.

IP	5 The first characteristicnumeral: Protection from introduction of solid foreign matter	5 The second characteristic numeral: Protection against penetration of water and its harmful effects	
0	Non-protected machine	Non-protected machine	0
1	Machine protected against solid objects greater than 50 mm	Machine protected against dripping water	1
2	Machine protected against solid objects greater than 12 mm	Machine protected against dripping water when tilted up to 15°	2
3	Machine protected against solid objects greater than 2.5 mm	Machine protected against spraying water	3
4	Machine protected against solid objects greater than 1 mm	Machine protected against splashing water	4
5	Dust-protected machine	Machine protected against water jest	5
6	Dust-tight machines	Machine protected against heavy seas	6

VIBRATION/BALANCING

All rotors are dynamically balanced with a half wedge.

According to IEC 60034-14. A vibration level is provided in standard motors. According to customer request, it is possible to produce motors with vibration level B.

Vibration levels with respect to frame size

Vibration Grade	Shaft Height [mm]	56≤ H ≤ 132		H > 132	
	Connection Type	Displacement µm	Velocitiy [mm/s]	Displacement µm	Velocitiy [mm/s]
A	Free suspension	45	2,8	45	2,8
	Rigid Connection	-	-	37	2,3
					2,8*
B	Free suspension	18	1,1	29	1,8
	Rigid Connection	-	-	24	1,5
					1,8*

ENVIRONMENTAL CONDITIONS

Motors are designed to operate at altitudes up to 1000 m and ambient temperature up to 40°C according to IEC 60034-1. Rated output will change at the % ratings given below for different altitudes and ambient temperatures.

ALTITUDE		up to 1000 m	up to 1500 m	up to 2000 m	up to 2500 m	up to 3000 m	up to 3500 m	up to 4000 m
Insulation Class	B	100	97	94	90	86	82	77
	F	100	98	95	91	87	83	78

AMBIENT TEMPERATURE		30°C	35°C	40°C	45°C	50°C	55°C	60°C
Insulation Class	B	106	106	100	97	92	86	60
	F	105	102	100	97	93	87	82

* 2 fn (twice the mains frequency) is the maximum permissible value for spectral measurement.

ELECTRICAL CONNECTIONS

Terminal plate has 6 connection terminals marked in accordance with IEC 60034-8.

Motor Type	Frame Size	63-80	90-100	112	132-160	180	200-225	250-280
QE	Cable Entry	M20	M25	M25	M32	M40	M50	M50/M63(*)
	Number of Entries	1	1	2	2	2	2	2
QH	Cable Entry	M20	M25	M25	M32	M40	M50	M50
	Number of Entries	1	2	2	2	2	2	2
QHS	Cable Entry	-	M20	M25	M25	M32	-	-
	Number of Entries	-	1	2	2	2	-	-
QN	Cable Entry	M20	M25	M25	-	-	-	-
	Number of Entries	1	2	2	-	-	-	-

*Optional

Standard three-phase motors can be connected with star or delta method.

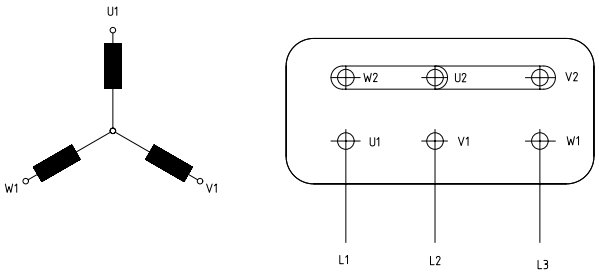

Star connection is achieved by wiring W2, U2, V2 to each other; and U1, V1, W1 leads to voltage supply

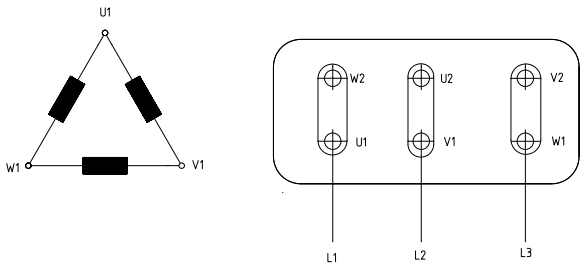

Delta connection is achieved by wiring the end of a phase to the head of the other.

STAR-DELTA (Y/Δ) START-UP

Most low voltage motors are delta wired to operate in 400V and star wired to operate at 690V. This flexibility can also be used to operate the motor under lower voltages. Apart from the fact that startup current in star-delta starting drops to one third of direct starting, startup torque also decreases by around 25%. The motor is started in star connection and accelerated as much as possible, then it is transferred to delta connection. This method can only be used in asynchronous motors which are delta-connected to supply voltage. Three-phase 2-4-6 pole motors up to 3 kW are operated as 230 VΔ / 400 VY, while three-phase motors above 3 kW are operated as 400 VΔ / 690 VY.

VOLTAGE & FREQUENCY

Our motors are normally design for 400V, 50Hz. Other voltages and 60 Hz frequency are optional. Our motors wound for 50Hz can be operated on 60Hz for the same output power. The ratios given below indicate changes in the given parameters.

		60 Hz Application Coefficients of 50 Hz Motor						
50 Hz Voltage	60 Hz Voltage	Rated Speed	Rated Power	Rated Torque	Rated Current	Starting Torque	Breakdown Torque	Starting Current
230 V	230 V	1,2	1	0,83	1	0,83	0,83	0,83
230 V	265 V	1,2	1,15	0,96	1	0,96	0,96	0,96
400 V	400 V	1,2	1	0,83	1	0,70	0,83	0,83
400 V	460 V	1,2	1,15	0,96	1	0,95	0,98	0,97

TOLERANCES

According to IEC 60034-1, catalogue values are permitted to deviate from the real values as follows:

Speed [n]	$\Delta n=\pm 20\%[n_S-n_N]$, $P_N > 1kW$ $\Delta n=\pm 30\%[n_S-n_N]$, $P_N <= 1kW$
Efficiency % [n]	$\Delta n= -15\%[100-n_N]$, $P_N <=150kW$ $\Delta n= -10\%[100-n_N]$, $P_N >150kW$
Power Factor [cos Q]	$\Delta cosQ= -1/6[1-cosQ]$
Locked Rotor Current $[I_L/I_N]$	$\Delta[I_L/I_N]=+20\% [I_L/I_N]$
Locked Rotor Torque $[M_L/M_N]$	min $[M_L/M_N]=-15\%[M_L/M_N]$ max $[M_L/M_N]=+25\%[M_L/M_N]$
Breakdown Torque $[M_K/M_N]$	$\Delta[M_K/M_N]= -10\%[M_K/M_N]$
Pull-up Torque $[M_P/M_N]$	$\Delta[M_P/M_N]= -15\%[M_P/M_N]$
Torque of Inertia [J] [kgm^2]	$\Delta J=\pm 10\% J$
Sound Pressure Level [LPA] [dB]	$\Delta LPA = +3dB[A]$

Frame	Housing	Fan	Fan Cover	B3-NDE Endshield	B5 Flange	B14a/B14b Flange
63	Aluminium	Plastic	Steel	Aluminium	Aluminium	Aluminium
71						
80	Aluminium/ Cast Iron			Aluminium/ Cast Iron	Aluminium/ Cast Iron	Aluminium/ Cast Iron
90						
100						
112						
132						
160					Cast Iron	Cast Iron
180						
200*						
225*						
250						
280	Cast Iron			Cast Iron		
315						
355						

* Plastic fan cover option is available for 200 - 225 frame motors.

MOUNTING ARRANGEMENTS

B3 - IM 1001	V5 - IM 1011	V6 - IM 1031	B6 - IM 1051	B7 - IM 1061	B8 - IM 107	
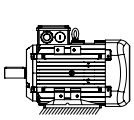	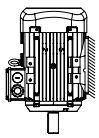	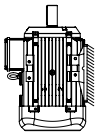	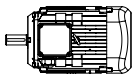	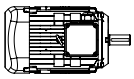	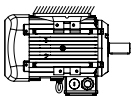	
B5 - IM 3001	V1 - IM 3011	V3 - IM 3031				FA (B5)
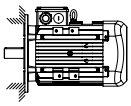	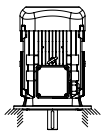	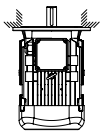				
B14 - IM 3601	V18 - IM 3611	V19 - IM 3631				FB (B14b) FC (B14a)
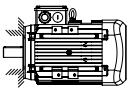	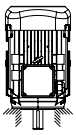					
B35 - IM 2001	V15 - IM 2011	V35 - IM 2031	IM 2051	IM 2061	IM 2071	PA (B35)
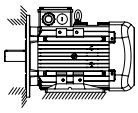	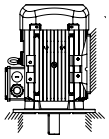	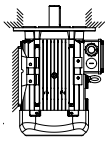	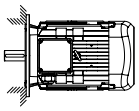	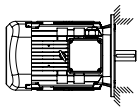	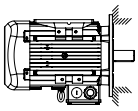	
B34 - IM 2101	V17 - IM 2111	V37 - IM 2131	IM 2151	IM 2161	IM 2171	PB (B34b) PC (B34a)
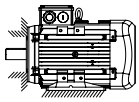	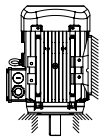	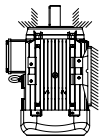	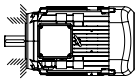	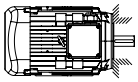	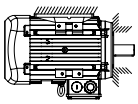	

The standard application for aluminum body motors between 63-250 Frame is assembly without fixed bearings, with the bearing thrust spring NDE (also on the rear cover). Fixed bearings can be produced on drive or non drive side according to customer demand. As a manufacturer company, fixed bearing design on drive side is recommended for pump applications.

BEARING

63-225 frame motors are equipped with deep grove ball bearings with ZZ shields.

250-355 frame size motors have external lubrication.

Please refer to the mechanical dimension section for specific motor data.

On the front and rear covers of our 100 Frame H and HS series motors, there are steel bushings in the bearing seats.

There are also steel bushings in the bearing seats of our 100 H and 112-132 Frame H and HS platform Aluminum B5 flanges.

			Drive Side	Non Drive Side
ALUMINIUM	63	E	6201 ZZ	6201 ZZ
	71	E	6202 ZZ	6202 ZZ
	80	H	6204 ZZ	6204 ZZ
		N	6204 ZZ	6204 ZZ
	90	H	6305 ZZ	6205 ZZ
		HS	6305 ZZ	6204 ZZ
		N	6205 ZZ	6205 ZZ
	100	H	6306 ZZ	6205 ZZ
		HS	6306 ZZ	6205 ZZ
		N	6206 ZZ	6206 ZZ
	112	H	6306 ZZ	6206 ZZ
		HS	6306 ZZ	6205 ZZ
		N	6206 ZZ	6206 ZZ
	132	H	6208 ZZ	6208 ZZ
		HS	6208 ZZ	6206 ZZ
	160	H	6309 ZZ	6209 ZZ
		HS	6309 ZZ	6208 ZZ
	180	H	6310 ZZ	6310 ZZ
		HS	6310 ZZ	6209 ZZ
	200	H	6312 ZZ	6310 ZZ
	225	E	6313 ZZ	6313 ZZ
	250*	E	6315 ZZ	6312 ZZ

* Lubricated Bearings

			Drive Side	Non Drive Side
CAST IRON	80	HG	6204 ZZ	6204 ZZ
	90	HG	6305 ZZ	6205 ZZ
	100	HG	6306 ZZ	6306 ZZ
	112	HG	6306 ZZ	6306 ZZ
		HSG	6306 ZZ	6306 ZZ
	132	HG	6308 ZZ	6308 ZZ
		HSG	6308 ZZ	6306 ZZ
	160	HG	6309 ZZ	6309 ZZ
		HSG	6309 ZZ	6309 ZZ
	180	HG	6310 ZZ	6310 ZZ
		HSG	6310 ZZ	6310 ZZ
	200	HG	6312 ZZ	6310 ZZ
	225	HG	6313 ZZ	6313 ZZ
	250	HG	6315 ZZ	6313 ZZ
	280	HG -2P	6314	6314
		HG-4P-6P	6317	6317
	315	HG -2P	6316	6316
		HG-4P-6P	6319	6319

TECHNICAL DOCUMENTATION

LUBRICATION

Closed type (ZZ) roller bearings are being used. These types of roller bearings do not require maintenance since they are lubricated with the type of lubricant specified by the manufacturer.

Roller bearings should be replaced after 20,000 hours of operation (approx. 2-5 years of use) due to the specified operation temperature, vibration level and shaft loads.

The grease type and quantity are written on the nameplate for motors that have externally lubricated roller bearings. There are bearing lubrication channel and grease nipple for motors that have externally lubricated bearings. After lubrication, grease nipple cover must be closed. Grease must be avoided from dirt and dust during lubrication. Quantity of grease indicated on the nameplatel should be considered and different grease must not be used. The mix of different grease must be avoided.

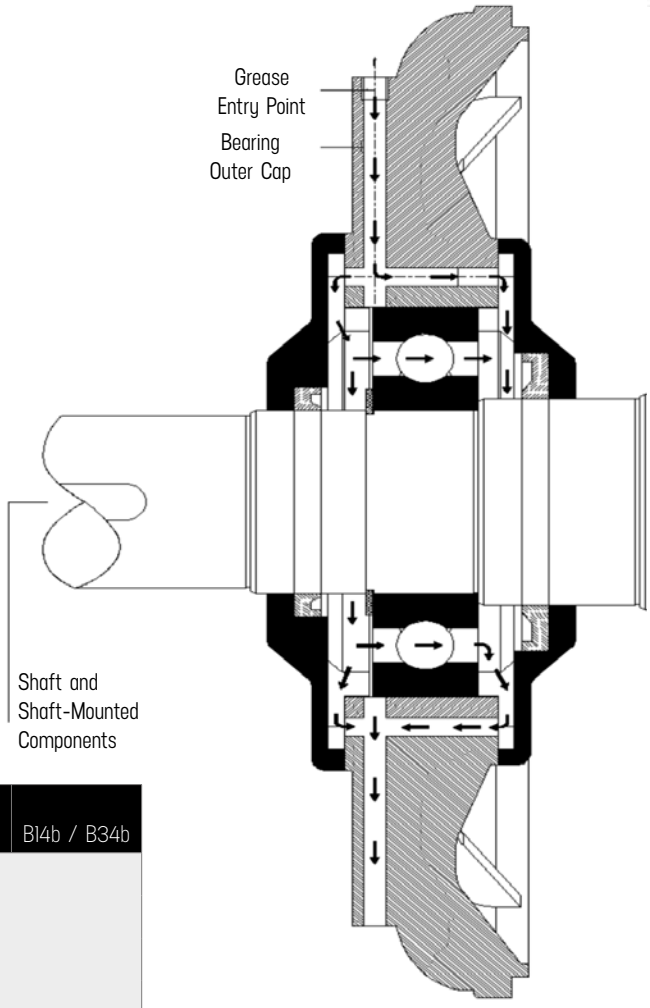

	PLATFORM	Spouse Bearing	B3	B5 / B35	B14a / B34a	B14b / B34b
63	E	YES	No lubrication option between 63-112.			
71	E	YES				
80	H	YES				
	N	YES				
90	H	NO				
	HS	NO				
	N	YES				
100	H	NO				
	HS	NO				
	N	YES				
112	H	NO				
	HS	NO				
	N	YES				
132	H	YES	In design phase.			
	HS	NO				
160	H	NO	In design phase.		Lubrication option for B14-B14b flanges 160 and above doesn't exist.	
	HS	NO	1	1		
180	H	YES	2	2		
	HS	NO	2	2*		
200	H	NO	3	3		
225	E	YES	In design phase.			
250	E	NO	In design phase.			

160 Frame and above Aluminum motors with B14a and B14b Flange is not available.

160 Frame and above all B5 Flanges are made of cast iron.

1 B3+B5+ DEEP NDE LUBRICATION OPTION AVAILABLE (NO NDE LUBRICATION OPTION)
2 B3+B5+KTA+ DEEP NDE LUBRICATION OPTION AVAILABLE (* NO LUBRICATION in NDE in HS Frame)
3 B5+KTA+DEEP NDE LUBRICATION OPTIONS AVAILABLE
4 B5 FLANGE LUBRICATION OPTION AVAILABLE (NDE NO LUBRICATION OPTION)

<table>
<tr><th></th><th>PLATFORM</th><th>Spouse Bearing</th><th>B3</th><th>B5 / B35</th><th>B14a / B34a</th><th>B14b / B34b</th></tr>
<tr><td>80</td><td>HG</td><td>YES</td><td colspan="4" rowspan="8">Lubricated bearing in design phase.</td></tr>
<tr><td>90</td><td>HG</td><td>NO</td></tr>
<tr><td>100</td><td>HG</td><td>YES</td></tr>
<tr><td rowspan="2">112</td><td>HG</td><td>YES</td></tr>
<tr><td>HSG</td><td>YES</td></tr>
<tr><td rowspan="2">132</td><td>HG</td><td>YES</td></tr>
<tr><td>HSG</td><td>NO</td></tr>
<tr><td rowspan="2">160</td><td>HG</td><td>YES</td></tr>
<tr><td>HSG</td><td>YES</td></tr>
<tr><td rowspan="2">180</td><td>HG</td><td>YES</td><td colspan="2" rowspan="4">Lubricated bearing in design phase.</td><td colspan="2" rowspan="7">B14 and B14b flange on 180 frame and above cast iron motors doesn't exist.</td></tr>
<tr><td>HSG</td><td>YES</td></tr>
<tr><td>200</td><td>HG</td><td>YES</td></tr>
<tr><td>225</td><td>HG</td><td>YES</td></tr>
<tr><td>250</td><td>HG</td><td>NO</td><td>E</td><td>E</td></tr>
<tr><td>280</td><td>HG</td><td>YES</td><td>E</td><td>E</td></tr>
<tr><td>315</td><td>HG</td><td>YES</td><td>E</td><td>E</td></tr>
</table>

There is no B14a Flange on the 160 Frame in the Cast Iron Motor range.
There is no B14b Flange on all Cast Iron Motors.

* B3 Cover and B5 and B14 Flanges used in the Cast Iron Motor series not compatible with aluminum series.
* Cast Iron Motor series 250 - 280 and 315 Frame motors B3 - B5 and It is manufactured as B35 with a standard two-side open lubricated bearing.

PAINTING

Our standard motors are delivered painted in RAL 7012 Gray and RAL 6011 Green. Products with FL and FP extension codes have UL approval and is produced with RAL 7012 Grey color. Other paint options are also available on request. Products with Marine certificate are painted in accordance with C5M paint standard.

FEET

For 63-200 frame size aluminium motors, feet can be mounted on three sides, allowing terminal box assembly on the desired side. For 63-250 frame size aluminium motors, the feet are detachable and this feature provides flexibility for different mounting types.
The mounting feet on the QN series housings are single-position removable.

TERMINAL BOX

Motors have terminal boxes positioned on top at drive end. Terminal boxes can be rotated 90° for 63-250 frame sizes (except N series), so that cable inlet can be placed at each side of the motor. For PT100 inputs in the terminal boxes, gland inlet can also be provided as an option. In QN series motors the terminal box can not be removed. Cable exit direction can be adjusted to the left or right when viewed from the shaft end. In Aluminum motors between 63-225, the terminal box is Aluminum.

DRAIN/CONDENSATION HOLES

In the basic design, motors are supplied without drain holes. In case of customer requests, motors can be supplied with drain holes. A special plug is used in the drain hole of this type of motors. Therefore, the protection class of the motors is not affected (IP56).

MOTOR IDENTIFICATION SYMBOLS

Q3E FA 225 M 4 C-43 (Sample motor number)

Q3E	Motor Type
Q4H	IE4 efficiency class motors
Q3H	IE3 efficiency class motors
Q3HS	IE3 efficiency class motors
Q2H	IE2 efficiency class motors
Q2HS	IE2 efficiency class motors
Q4E	IE4 efficiency class motors
Q3E	IE3 efficiency class motors
Q2E	IE2 efficiency class motors
Q3D	IE3 efficiency class inverter entegrated motors
S3H	IE3 efficiency class smoke extraction motors
S2H	IE2 efficiency class smoke extraction motors
Q3N	IE3 verim sınıfına sahip motorlar
Q2N	IE2 verim sınıfına sahip motorlar
Q2MN	IE2 efficiency class motors with run capacitor
Q2CN	IE2 efficiency class motors with start and run capacitors

P Housing Type

--- Aluminium

P or G Cast Iron

FA	Construction Type	
---	with feet	B3,B6,B7,B8,V5,V6/V19
FA	with A flange	B5,V1,V3
FB	with B flange	B14,V18,V19
FC	with C flange	B14,V18,V19
FS	with special flange	-
PA	with feet and A flange	B3/B5,V1/V5,V3/V6
PB	with feet and B flange	B3/B14,V5/V18,V6/V19
PC	with feet and C flange	B3/B14,V5/V18,V6/V19
PS	with feet and special flange	-
X	without feet,flange and /or end-shield	B9,V8,V9

225 Frame Size Shaft height (mm)

M . Motor Length

S Short

M Medium

L Long

4 . Number of Poles **2.4.6.8 Poles**

C . Core Length **(Does not affect outside dimensions)**

A Short

B Medium

C Long

D,E Extra Long

43 . Special Motor Number 01 - ... - 99

Model	Q	3	E	-	FA	225	M	4	C	40	BN	UL
	a	b	c	d	e	f	g	h	i	j		k

Q	-	E	-	-	63	S	2	-	-	-
K	1	H	G.P	FA	71	M	4	A	0-99	AA-ZZ
S	2	HS		FB	80	L	6	B		
M	3	N		FC	90	LH	8	C		
	4	NR		FS	100		2-4	D		
		C		PA	112		4-8	DE		
		CN		PB	132		2-12	E		
		B		PC	160		4-16			
		M		PS	200					
		MN		X	225					
					250					
					280					
					315					
					355					
					400					
					450					

a: Electric Motor Series
b: Efficiency Classes
c: Motor Type
d: Body Material
e: Flange Structure Type
f: Frame Size
g: Motor Length
h: Number of Poles
i: Core Length
j: Special Motor Number
k: UL Approval

FA	Construction Type	
---	with feet	B3,B6,B7,B8,V5,V6/V19
FA	with A flange	B5,V1,V3
FB	with B flange	B14,V18,V19
FC	with C flange	B14,V18,V19
FS	with special flange	-
PA	with feet and A flange	B3/B5,V1/V5,V3/V6
PB	with feet and B flange	B3/B14,V5/V18,V6/V19
PC	with feet and C flange	B3/B14,V5/V18,V6/V19
PS	with feet and special flange	-
X	without feet,flange and /or end-shield	B9,V8,V9

PERMISSIBLE RADIAL LOADS

Radial Load Location		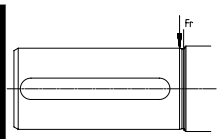	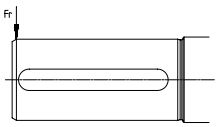
Frame Size	Speed [rpm]	Radial Load [X=0] [kN]	Radial Load [X=max] [kN]
63	3000	0,25	0,22
	1500	0,29	0,25
	1000	0,31	0,27
71	3000	0,30	0,26
	1500	0,35	0,29
	1000	0,37	0,31
80	3000	0,54	0,45
	1500	0,62	0,51
	1000	0,66	0,54
90	3000	0,91	0,74
	1500	0,99	0,80
	1000	1,04	0,84
100	3000	1,21	0,96
	1500	1,31	1,04
	1000	1,38	1,09
112	3000	1,23	1,00
	1500	1,33	1,09
	1000	1,40	1,14
132	3000	1,22	0,98
	1500	1,31	1,04
	1000	1,34	1,08
160	3000	2,22	1,72
	1500	2,34	1,82
	1000	2,34	1,82
180	3000	2,68	2,12
	1500	2,82	2,23
	1000	2,93	2,31
200	3000	3,80	3,04
	1500	3,95	3,16
	1000	4,07	3,26
225	3000	4,45	3,65
	1500	4,59	3,60
	1000	4,73	3,71
250	3000	4,97	3,93
	1500	5,78	4,57
280	3000	4,97	3,93
	1500	5,78	4,57
315	3000	6,04	5,23
	1500	6,08	5,61
355	3000	5,88	5,17
	1500	8,49	7,37

* All calculations are based on floating bearing arrangement for standard (excluding compact & super compact) motors.

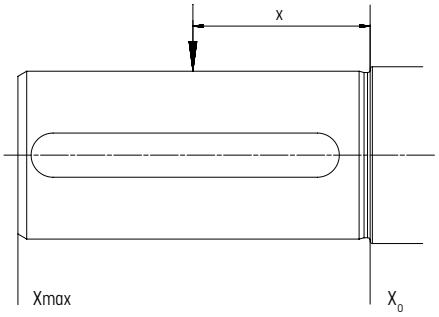

Calculations are based on 20.000h (L10aah) bearing life time and the actual values will differ if radial and axial loads act at the same time. Mechanical strength of the end-shields should also be considered for critical applications.

Value of force Fr acting on any point of the shaft end (between points X=max and X=0) may be calculated according to the following formula:

$$F_r = F_{x0} - \frac{x}{E} \times (F_{x0} - F_{xmax}) \, [kN]$$

Where:

F_{x0} - value of Fr force acting on the beginning of the shaft end

F_{xm} - value of Fr force acting on the shaft end

E - length of the shaft end

PERMISSIBLE AXIAL LOADS

Position & Axial Load Direction										
Frame Size	Speed [rpm]	MOTOR SERIES / AXIAL LOADS [kN]								
		QH, QE	QHS	QH, QHS, QE	QH, QHS, QE	QH , QE	QHS	QH, QHS, QE	QH , QE	QHS
63	3000	0,09		0,23	0,22	0,10		0,24	0,08	
	1500	0,09		0,31	0,29	0,11		0,33	0,07	
	1000	0,09		0,36	0,34	0,11		0,38	0,07	
71	3000	0,11		0,25	0,23	0,13		0,27	0,09	
	1500	0,11		0,33	0,31	0,14		0,36	0,09	
	1000	0,11		0,39	0,37	0,14		0,42	0,09	
80	3000	0,15	0,15	0,43	0,40	0,18	0,18	0,46	0,12	0,12
	1500	0,15	0,15	0,57	0,53	0,19	0,19	0,61	0,11	0,11
	1000	0,15	0,15	0,67	0,63	0,19	0,19	0,71	0,11	0,11
90	3000	0,19	0,15	0,75	0,70	0,23	0,20	0,80	0,14	0,10
	1500	0,19	0,15	0,99	0,93	0,25	0,22	1,06	0,12	0,09
	1000	0,19	0,15	1,18	1,12	0,25	0,22	1,25	0,12	0,09
100	3000	0,19	0,19	0,94	0,88	0,25	0,25	1,01	0,12	0,12
	1500	0,19	0,19	1,25	1,17	0,27	0,27	1,34	0,10	0,10
	1000	0,19	0,19	1,49	1,41	0,27	0,27	1,58	0,10	0,10
112	3000	0,23	0,19	0,94	0,86	0,31	0,27	1,02	0,14	0,11
	1500	0,23	0,19	1,25	1,14	0,34	0,30	1,36	0,11	0,07
	1000	0,23	0,19	1,49	1,38	0,34	0,30	1,60	0,11	0,07
132	3000	0,30	0,23	0,93	0,75	0,48	0,41	1,11	0,12	0,04
	1500	0,30	0,23	1,23	1,01	0,52	0,44	1,45	0,08	9,00
	1000	0,30	0,26	1,46	1,24	0,52	0,47	1,68	0,08	0,04
160	3000	0,34	0,30	1,78	1,53	0,59	0,55	2,03	**	**
	1500	0,34	0,30	2,40	2,01	0,72	0,69	2,79	**	**
	1000	0,34	0,30	2,75	2,36	0,72	0,69	3,14	**	**
180	3000	0,38	0,34	2,01	1,65	0,73	0,69	2,37	**	**
	1500	0,38	0,34	2,70	2,18	0,90	0,86	3,22	**	**
	1000	0,38	0,34	3,20	2,68	0,90	0,86	3,72	**	**
200	3000	0,38		2,60	1,95	1,03		3,25	**	
	1500	0,38		3,52	2,77	1,13		4,27	**	
	1000	0,38		4,20	3,45	1,13		4,95	**	
225	3000	0,49		2,90	2,10	1,29		3,70	**	
	1500	0,49		3,90	2,90	1,49		4,90	**	
	1000	0,49		4,65	3,65	1,49		5,65	**	
250	3000	0,60		3,65	2,65	1,60		4,65	**	
	1500	0,60		4,75	3,54	1,81		5,96	**	
280	3000	0,60		3,65	2,38	1,87		4,92	**	
	1500	0,60		4,75	3,11	2,24		6,39	**	
315	3000	4,56		3,68	1,52	7,90		**	**	
	1500	5,20		4,00	1,08	9,62		**	**	
355	3000	4,52		3,62	0,38	9,50		**	**	
	1500	6,40		5,00	2,73	13,55		**	**	

* All calculations are based on floating bearing arrangement for standard (excluding compact & super compact) motors.

** Please get in contact for a specific design.

TECHNICAL DOCUMENTATION

DUTY TYPE

Duty types according to the IEC 60034-1 are given below:

S1: Continuous running duty

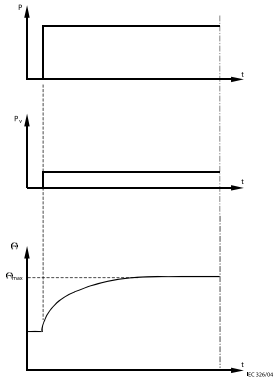

P	load
P_v	electrical losses
Θ	temperature
$Θ_{max}$	maximum temperature attained
t	time

S2: Short-time duty

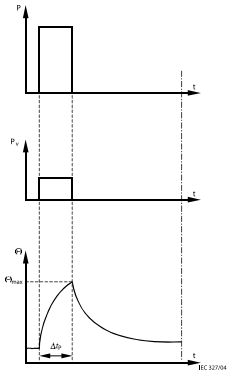

P	load
P_v	electrical losses
Θ	temperature
$Θ_{max}$	maximum temperature attained
t	time
t_P	operation time at constant load

S3: Intermittent periodic duty

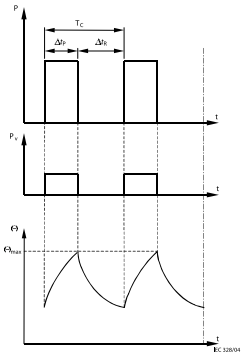

P	load
P_v	electrical losses
Θ	temperature
$Θ_{max}$	maximum temperature attained
t	time
T_C	time of one load cycle
$Δt_P$	operation time at constant load
$Δt_R$	time de-energized and at rest

S4: Intermittent periodic duty with starting

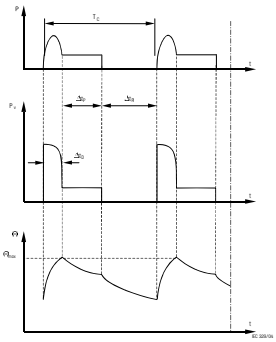

P	load
P_v	electrical losses
Θ	temperature
$Θ_{max}$	maximum temperature attained
t	time
T_C	time of one load cycle
$Δt_D$	starting/accelerating time
$Δt_P$	operation time at constant load
$Δt_R$	time de-energized and at rest

S5: Intermittent periodic duty with electric braking

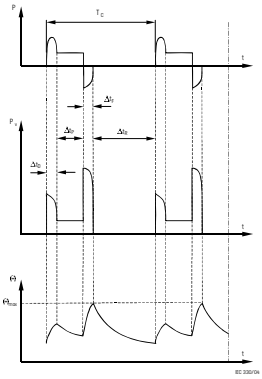

P	load	T_C	time of one load cycle
P_v	electrical losses	$Δt_D$	starting/accelerating time
Θ	temperature	$Δt_P$	operation time at constant load
$Θ_{max}$	maximum temperature attained	$Δt_F$	time of electric braking
t	time	$Δt_R$	time de-energized and at rest

S6: Continuous operation periodic duty

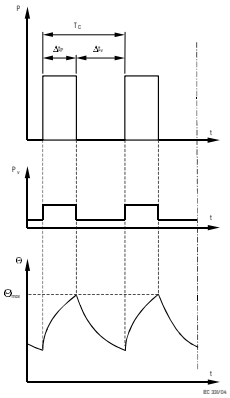

P	load	t	time
P_v	electrical losses	T_C	time of one load cycle
Θ	temperature	$Δt_P$	operation time at constant load
$Θ_{max}$	maximum temperature attained	$Δt_v$	operation time at no-load

S7: Continuous operation periodic duty with electric braking

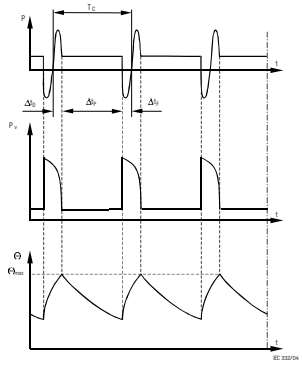

P	load	T_C	time of one load cycle
P_v	electrical losses	$Δt_D$	starting/accelerating time
Θ	temperature	$Δt_P$	operation time at constant load
$Θ_{max}$	maximum temperature attained	$Δt_F$	time of electric braking
t	time		

S8: Continuous operation periodic duty with related load/speed changes

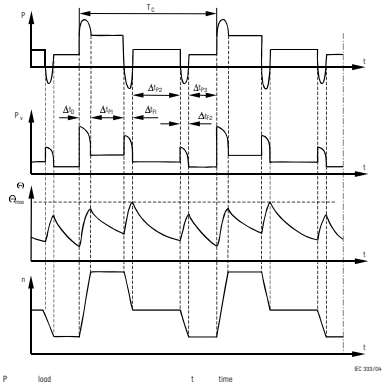

P	load	t	time
P_v	electrical losses	T_C	time of one load cycle
Θ	temperature	$Δt_D$	starting/accelerating time
$Θ_{max}$	maximum temperature attained	$Δt_P$	operation time at constant load (P1, P2, P3)
n	speed	$Δt_F$	time of electric braking (F1, F2)

S9: Duty with non-periodic load and speed variations

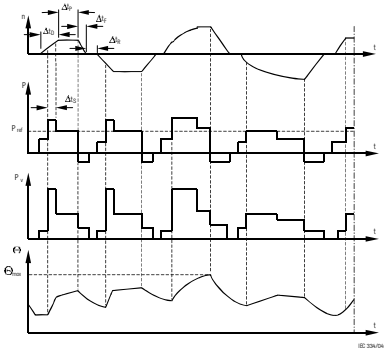

P	load	t	time
P_{ref}	reference load	t_D	starting/accelerating time
P_v	electrical losses	t_P	operation time at constant load
Θ	temperature	t_F	time of electric braking
$Θ_{max}$	maximum temperature attained	t_R	time de-energized and at rest
n	speed	t_G	time under overload

S10: Duty with discrete constant loads and speeds

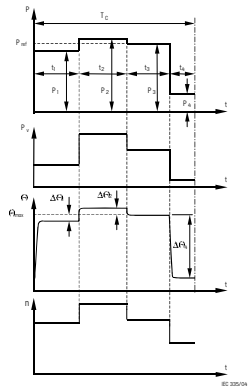

P	load	t	time
P_i	constant load within a load cycle	t_i	time of a constant load within a cycle
P_{ref}	reference load based on duty type S1	T_C	time of one load cycle
P_v	electrical losses	ΔΘ	difference between the temperature rise of the winding at each of the various loads within one cycle and the temperature rise based on duty cycle S1 with reference load
Θ	temperature		
$Θ_{ref}$	temperature at reference load based on duty type S1	n	speed

The duty type of our standard motors is S1. On customer demand, the other duty type-motors can be produced.

INDUCTION MOTORS FED BY INVERTER

Due to its simple and rugged construction, low cost production and less maintenance requirements, squirrel cage induction motors are the most preferred type of industry. In particular, technological developments and cost reduction in power electronics fields and also regulations on energy efficiency especially in HVAC industry, motivate the use of induction machine fed by inverters.

Important issues regarding the motor operation fed by the inverter are listed below:

- The application should be compatible with the torque-speed curve of the selected motor and also continuous and maximum output current capability of the inverter. Please, get in contact with your inverter supplier regarding the normal duty and heavy duty operation based on your application.

- High switching frequency operation of the inverter imposes voltage stress on motor insulation. Please, get in contact with us if your inverter switching frequency is higher than 5 kHz.

- High switching frequency improves the efficiency of the motor and also decreases the noise level while decreases the inverter efficiency.

- Motor control modes of the inverter (Scalar or Vector) are chosen depending on the applications. Scalar control (U/f) is used mainly in applications like pump and fans where the requirements on speed accuracy and load dynamics, and starting torque are not so strict.

Vector control mode is used mainly in applications, where high starting torque, high accuracy on speed and the fast changes at load, prolonged low speed operation at load are required. Due to the control principle, vector control can provide higher torque for the same motor current and handle dynamic torque changes. In that sense, in case of operation by scalar control mode, a higher current rating inverter with is required, for the same application conditions.

- Beside the efficiency class of the motor, efficient operation of the motor is also dependent on the parameter settings of the inverter. (Motor control modes, switching frequency, braking methods, torque boost in Scalar control have the influence on efficient operation and thermal load of the motor.)

- Control methods used in speed sensor-less vector control may have varying performance, dependent on the motor design. Therefore, although using the same inverter, user may experience different performance at the motors produced by the different manufacturers.

- Identification of the motor equivalent circuit, which is part of the auto-tuning procedure of the inverter, is a critical setting which has influence on torque capability, speed accuracy, low and high speed performance and also efficient operation of the motor.

- Inverter suppliers may have different PWM Modulation methods which has especially influence on noise characteristics of the motor and other characteristics like inverter and motor efficiency and thermal behaviour as well.

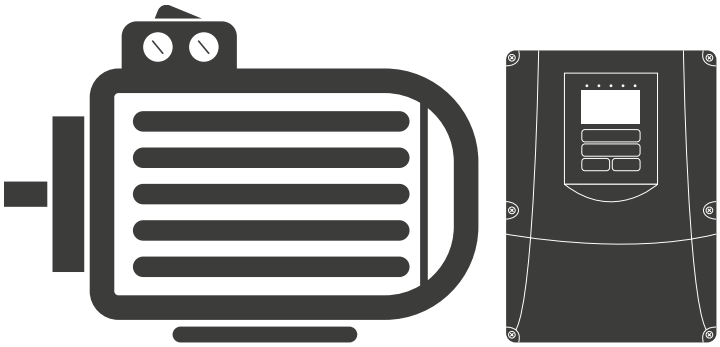

EFFICIENCY

European Committee of Manufacturers of Electrical Machines and Power Electronics (CEMEP) and European Commission issued a declaration on June 28, 1999 that categorized the motors in efficiency classes.

This standard covers 2, 4 and 6 pole motors in 0.12kW and 1000kW power range and 50-60Hz frequency and refers to IEC standard 60034-2-1 to define efficiency.

Efficiency is defined as the ratio of output power of the motor to the input power reflected in the cost and it is actually an indicator of losses.

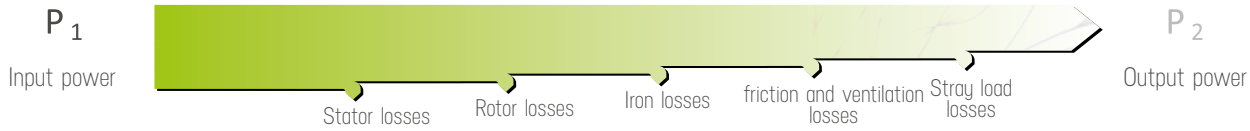

Commission Regulation EU 2019/1781, amendment (EU) 2021/341 had set new requirements for electric motors:

Latest Ecodesign Regulation (EU) 2019/1781 came into effect in October 2019 and it applies to low-voltage induction electric motors rated at less than 1,000 V alternating current (AC).
The regulation has been implemented in two steps starting on July 1, 2021.
The second stage, which expands the scope further and increases the requirements for motors on July 1, 2023.

July 1, 2021
The regulation covers 3-phase single-speed motors 50 Hz, 60 Hz, 50/60 Hz for direct-on-line operation with continuous duty defined as S3 ≥ 80% and S6 ≥ 80%.
Brake motors with external brake is also within the scope of new regulation.

Three phase motors with rated output ≥ 0.12 kW and < 0.75 kW: minimum IE2 efficiency level is mandatory.
Three phase motors with rated output ≥ 0.75 kW and ≤ 1 000 kW: minimum IE3 efficiency level is mandatory. Please also note that IE2 + VSD option is not allowed.

July 1, 2023
IE4 efficiency level mandatory for 3-phase motors: Rated output equal to or above 75 kW and equal or below 200 kW; with 2, 4 or 6 poles which are not brake motors nor Ex-motors.

IE3 requirements as from July 1, 2021.
Three phase motors with rated output ≥ 75 kW and ≤ 200 kW: minimum IE4 efficiency level is mandatory.
Single phase motors with rated output ≥ 0.12 kW and < 1000 kW: minimum IE2 efficiency level is mandatory.

TECHNICAL DOCUMENTATION

According to EC No 640/2009 regulation, motor labels will include 50Hz and/or 60Hz motor data as well as IE codes and efficiency value. Most prominent feature of new labels is that 2D barcoding will be placed on the labels. This application ensures the customers to track the motors.

With barcoding, the motor users will be able to reach information such as manufacture date of motor, results of routine testing (current with neutral resistance, power etc.) and serial no. and etc.

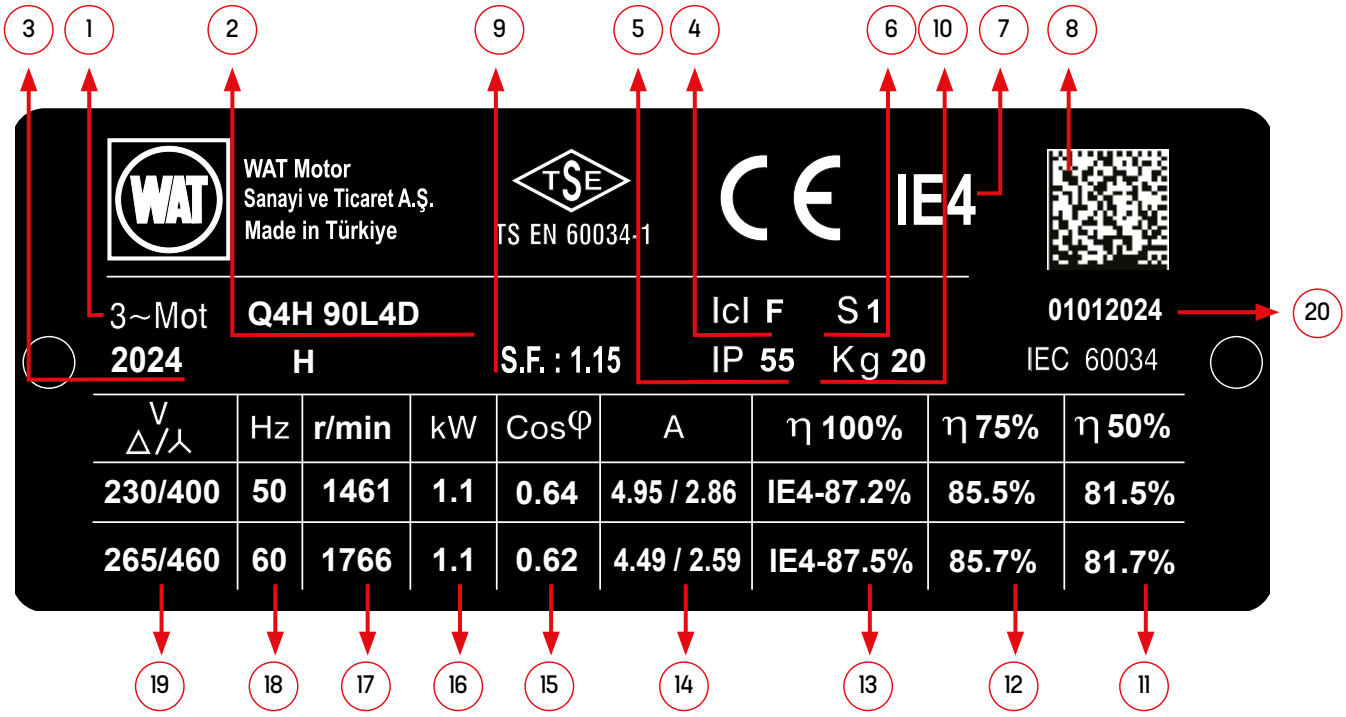

1 Motor type
2 Motor code
3 Year of manufacture
4 Insulation class
5 IP class
6 Service type
7 Efficiency class (acc. to IEC 60034-30)
8 2D Barcode
9 Service factor *
10 Motor weight
11 Efficiency value (acc. to IEC 60034-2-1)
12 Load value
13 Efficiency value (acc. to IEC 60034-2-1)
14 Nominal current
15 Power factor
16 Motor output power
17 Rated speed
18 Motor nominal frequency
19 Operation voltage
20 Production tracing number

* For IE2 and above efficiency (except 315 & 355 frame) motors, SF 1.15 is optional (with temperature rise F) for 315 & 355 frame motors.

THREE PHASE ALUMINIUM MOTORS

IE4 THREE PHASE ALUMINIUM MOTORS

ELECTRICAL CHARACTERISTICS @ 50 Hz

	MOTOR TYPE	HOUSING TYPE	RATED VALUES					STARTING VALUES				Breakdown Torque Ratio	EFFICIENCY *			Cosφ	J	Weight (B3)	Sound Pressure Level
			POWER		SPEED	CURRENT	TORQUE	CURRENT IA / IN		TORQUE MA / MN			η %						
			kW	HP	rpm	A	Nm	λ	Δ	λ	Δ	Mk/ Mn	4/4	3/4	2/4	4/4	kgm²	kg	dBA**
2 pole 3000 rpm																			
230/400 V	Q4E63M2B	Aluminium	0,18	1/4	2870	0,8	0,6	6,9	-	3,5	-	3,70	70,8	69,6	63,9	0,80	0,00025	5,2	52
230/400 V	Q4E63M2C	Aluminium	0,25	1/3	2850	1,1	0,8	6,9	-	3,9	-	3,50	74,3	74,4	71,9	0,83	0,00028	6,0	53
230/400 V	Q4E71M2B	Aluminium	0,37	1/2	2855	1,5	1,2	7,6	-	4,6	-	4,50	78,1	76,3	71,9	0,80	0,00056	7,0	52
230/400 V	Q4E71M2C	Aluminium	0,55	3/4	2833	2,3	1,9	7,3	-	5,0	-	4,50	81,5	79,0	75,1	0,75	0,00067	7,5	54
230/400 V	Q4H80M2D	Aluminium	0,75	1	2898	2,6	2,5	9,8	-	4,2	-	4,40	83,5	84,2	82,0	0,85	0,00170	11,8	57
230/400 V	Q4H80M2DE	Aluminium	1,10	1,5	2915	4,1	3,6	12,0	-	6,1	-	5,80	85,2	83,7	80,6	0,80	0,00224	14,8	59
230/400 V	Q4H90L2D	Aluminium	1,50	2	2947	5,3	4,9	13,6	-	4,6	-	6,00	86,5	86,6	83,4	0,80	0,00283	18,5	61
230/400 V	Q4H90L2E	Aluminium	2,20	3	2925	7,3	7,2	11,4	-	3,8	-	4,70	88,0	89,2	88,1	0,84	0,00318	20,0	62
230/400 V	Q4H100L2D	Aluminium	3,00	4	2943	11,2	9,8	12,9	-	4,9	-	6,20	89,1	86,3	82,9	0,77	0,00536	25,0	63
400/690 V	Q4H112M2D	Aluminium	4,00	5,5	2934	7,3	13,0	4,2	12,5	1,3	4,0	5,50	90,0	89,9	88,5	0,89	0,00741	34,6	66
400/690 V	Q4H132S2D	Aluminium	5,50	7,5	2946	10,7	18,0	3,9	11,8	1,3	3,8	6,00	90,9	89,9	88,2	0,82	0,02948	53,2	69
400/690 V	Q4H132S2DE	Aluminium	7,50	10	2937	14,1	24,5	3,4	10,3	1,3	3,8	5,10	91,7	91,3	90,1	0,85	0,03326	58,5	70
400/690 V	Q4H160M2D	Aluminium	11,00	15	2975	21,6	35,1	4,7	14,0	1,6	4,8	7,00	92,6	92,3	90,3	0,78	0,04117	88,0	73
400/690 V	Q4H160M2DE	Aluminium	15,00	20	2968	28,7	48,8	4,2	12,6	1,4	4,1	6,10	93,3	93,1	91,9	0,82	0,04578	95,0	74
400/690 V	Q4H160L2D	Aluminium	18,50	25	2969	35,6	59,7	4,4	13,3	1,5	4,5	6,50	93,7	93,4	92,4	0,80	0,05575	105,5	74
400/690 V	Q4H180M2B	Aluminium	22,00	30	2970	37,6	71,0	4,3	13,0	1,3	3,9	5,20	94,0	94,0	93,1	0,90	0,09831	142,8	75
400/690 V	Q4H200L2D	Aluminium	30,00	40	2970	51,3	96,9	4,0	12,1	1,3	3,8	5,00	94,5	94,1	93,1	0,90	0,11383	166,0	76
400/690 V	Q4H200L2E	Aluminium	37,00	50	2973	63,4	118,9	4,4	13,3	1,3	3,9	6,80	94,8	94,7	93,9	0,89	0,14770	200,0	76
400/690 V	Q4H225M2D	Aluminium	45,00	65	2967	76,9	145,4	3,3	10,0	0,8	2,3	4,80	95,0	94,9	94,2	0,90	0,23500	240,0	80
400/690 V	Q4HP250M2D	Cast Iron	55,00	75	2980	91,4	117,1	3,8	11,4	0,9	2,8	5,80	95,3	94,7	93,7	0,91	0,54000	537,0	78
400/690 V	Q4HG280M2C	Cast Iron	75,00	100	2982	124,2	240,0	-	6,7	-	2,6	3,00	95,6	95,6	94,9	0,92	1,17890	653,0	79
400/690 V	Q4HG280M2D	Cast Iron	90,00	125	2985	146,7	288,2	-	7,8	-	2,9	5,70	95,8	95,7	94,9	0,92	1,26380	680,0	79
400/690 V	Q4HG315S2C	Cast Iron	110,00	150	2988	193,9	352,1	-	10,8	-	3,6	5,20	96,0	95,4	94,2	0,85	1,66000	880,0	87
400/690 V	Q4HG315M2B	Cast Iron	132,00	180	2983	223,7	422,5	-	9,0	-	3,8	10,40	96,2	96,1	92,5	0,89	1,84000	900,0	87
400/690 V	Q4HG315L2A	Cast Iron	160,00	215	2989	284,7	511,1	-	12,1	-	6,7	13,40	96,3	95,8	94,5	0,84	2,05000	958,0	87
400/690 V	Q4HG315L2C	Cast Iron	200,00	285	2983	331,0	644,0		9,4	-	4,4	8,68	96,5	96,6	95,9	0,89	2,30000	1144,0	87
4 pole 1500 rpm																			
230/400 V	Q4E63M4B	Aluminium	0,12	1/6	1410	0,7	0,8	4,2	-	3,1	-	3,30	69,8	64,6	57,9	0,64	0,00026	4,7	41
230/400 V	Q4E63M4C	Aluminium	0,18	1/4	1420	1,0	1,2	6,0	-	4,3	-	4,20	74,7	72,8	67,0	0,61	0,00030	5,7	43
230/400 V	Q4E71M4B	Aluminium	0,25	1/3	1443	1,3	1,7	5,6	-	3,2	-	3,60	77,9	73,5	67,8	0,64	0,00085	7,0	44
230/400 V	Q4E71M4C	Aluminium	0,37	1/2	1438	1,7	2,4	6,2	-	3,7	-	3,90	81,1	77,9	73,7	0,67	0,00119	9,3	45
230/400 V	Q4H80M4D	Aluminium	0,55	3/4	1463	2,4	3,6	8,1	-	3,7	-	4,60	83,9	81,5	77,7	0,71	0,00261	11,7	52
230/400 V	Q4H80M4E	Aluminium	0,75	1	1453	2,9	4,9	8,0	-	3,5	-	4,20	85,7	83,9	81,1	0,76	0,00306	13,9	52
230/400 V	Q4H90L4D	Aluminium	1,10	1,5	1461	5,0	7,2	8,7	-	5,0	-	5,40	87,2	85,5	81,5	0,64	0,00526	20,0	51
230/400 V	Q4H90L4DE	Aluminium	1,50	2	1460	6,1	9,8	10,8	-	5,4	-	5,90	88,2	86,7	83,4	0,71	0,00691	24,5	54
230/400 V	Q4H100L4D	Aluminium	2,20	3	1462	8,6	14,4	9,6	-	4,0	-	5,00	89,5	88,0	85,5	0,72	0,01059	29,8	56
230/400 V	Q4H100L4E	Aluminium	3,00	4	1453	6,6	19,8	8,5	-	3,2	-	4,00	90,4	90,5	89,6	0,77	0,01070	34,2	57
400/690 V	Q4H112M4E	Aluminium	4,00	5,5	1452	8,3	26,4	3,1	9,4	1,3	3,8	4,50	91,1	90,4	89,7	0,78	0,01527	40,0	57
400/690 V	Q4H132S4C	Aluminium	5,50	7,5	1478	12,0	35,6	3,4	10,1	1,2	3,5	5,10	91,9	91,2	89,9	0,73	0,03847	57,5	60
400/690 V	Q4H132M4DE	Aluminium	7,50	10	1473	14,6	48,6	3,4	10,1	0,7	2,0	4,50	92,6	92,0	91,1	0,81	0,05441	78,0	61
400/690 V	Q4H160M4D	Aluminium	11,00	15	1479	22,7	71,1	2,7	8,0	1,0	3,1	3,60	93,3	93,0	92,2	0,75	0,09146	99,5	62
400/690 V	Q4H160L4C	Aluminium	15,00	20	1478	33,7	97,0	2,6	7,7	1,1	3,3	4,00	93,9	93,1	92,1	0,69	0,10511	116,0	63
400/690 V	Q4H180L4B	Aluminium	18,50	25	1484	36,0	119,3	3,3	10,0	1,0	3,0	3,90	94,2	94,1	93,8	0,79	0,11398	154,0	67
400/690 V	Q4H180L4C	Aluminium	22,00	30	1487	44,7	141,5	3,5	10,5	1,1	3,2	4,60	94,5	94,0	92,8	0,76	0,22166	182,0	67
400/690 V	Q4H200L4D	Aluminium	30,00	40	1480	53,8	193,6	-	8,1	-	2,2	4,20	94,9	95,2	94,9	0,86	0,21590	190,0	69
400/690 V	Q4H225M4D	Aluminium	37,00	50	1485	68,8	237,8	3,1	9,2	1,0	3,1	5,10	95,2	94,9	94,3	0,82	0,36400	246,0	71
400/690 V	Q4H225M4E	Aluminium	45,00	65	1482	88,5	290,1	2,9	8,6	1,0	3,1	5,00	95,4	94,9	94,4	0,78	0,43500	270,0	71
400/690 V	Q4HP250M4E	Cast Iron	55,00	75	1492	107,7	352,2	2,9	8,7	0,9	2,7	3,30	95,7	95,0	94,1	0,77	0,90800	531,0	72
400/690 V	Q4HG280M4C	Cast Iron	75,00	100	1492	127,9	480,5	-	5,9	-	1,7	4,30	96,0	95,8	95,1	0,89	1,72100	694,0	70
400/690 V	Q4HG280M4D	Cast Iron	90,00	125	1492	153,1	576,6	-	7,9	-	2,4	3,40	96,1	96,0	95,2	0,88	1,84140	694,0	70
400/690 V	Q4HG315S4C	Cast Iron	110,00	150	1492	188,5	704,2	-	8,5	-	3,5	6,60	96,3	95,5	94,7	0,89	3,42000	956,0	83
400/690 V	Q4HG315M4B	Cast Iron	132,00	180	1491	227,3	845,3	-	8,7	-	3,3	8,55	96,4	95,9	95,0	0,86	3,85000	1050,0	83
400/690 V	Q4HG315L4A	Cast Iron	160,00	215	1491	260,4	964,1	-	9,5	-	4,8	5,65	96,6	95,8	95,2	0,88	4,66000	1200,0	83
400/690 V	Q4HG315L4C	Cast Iron	200,00	285	1488	332,6	1281,8	-	7,4		3,6	4,25	96,7	96,4	96,3	0,89	4,66000	1200,0	83

* According to IEC 60034-2-1

** The sound pressure measurements are taken 1m away from the motor

** Tolerance +3 dBA

IE4 THREE PHASE ALUMINIUM MOTORS

ELECTRICAL CHARACTERISTICS @ 60 Hz

	MOTOR TYPE	HOUSING TYPE	RATED VALUES					STARTING VALUES				Breakdown Torque Ratio	EFFICIENCY *			Cosφ	J	Weight (B3)	Sound Pressure Level
			POWER		SPEED	CURRENT	TORQUE	CURRENT IA / IN		TORQUE MA / MN			η %						
			kW	HP	rpm	A	Nm	λ	Δ	λ	Δ	Mk/ Mn	4/4	3/4	2/4	4/4	kgm²	kg	dBA**
2 pole 3600 rpm																			
265/460 V	Q4E63M2B	Aluminium	0,18	1/4	3493	0,41	0,5	6,45	-	3,83	-	4,91	70,0	68,8	63,9	0,80	0,00097	5,2	61
	Q4E63M2C	Aluminium	0,25	1/3	3488	0,51	0,7	6,62	-	4,31	-	4,58	74,0	73,8	70,3	0,79	0,00112	6,0	61
	Q4E71M2B	Aluminium	0,37	1/2	3474	0,77	1,0	7,29	-	5,06	-	5,96	77,0	76,5	73,4	0,78	0,00131	7,0	65
	Q4E71M2C	Aluminium	0,55	3/4	3462	1,17	1,5	6,90	-	5,55	-	5,90	80,0	77,5	73,7	0,72	0,00140	7,5	65
	Q4H80M2D	Aluminium	0,75	1	3535	1,36	2,0	8,10	-	2,90	-	3,70	82,5	83,1	80,9	0,83	0,00170	11,8	60
	Q4H80M2DE	Aluminium	1,10	1,5	3525	2,10	3,0	10,00	-	4,30	-	4,80	85,5	84,0	80,8	0,79	0,00224	14,8	62
	Q4H90L2D	Aluminium	1,50	2	3575	2,72	4,0	13,12	-	5,06	-	7,94	86,5	86,6	83,4	0,83	0,00294	18,5	69
	Q4H90L2E	Aluminium	2,20	3	3535	3,70	6,0	9,50	-	2,70	-	3,90	88,5	89,5	88,5	0,84	0,00318	20,0	65
	Q4H100L2D	Aluminium	3,00	4	3555	5,55	8,1	10,70	-	3,40	-	5,10	89,5	86,7	83,3	0,76	0,00536	25,0	66
460/795 V	Q4H112M2D	Aluminium	4,00	5,5	3543	6,40	10,8	-	10,40	-	2,80	4,60	89,5	89,4	88,0	0,89	0,00741	34,6	69
	Q4H132S2D	Aluminium	5,50	7,5	3560	9,40	14,9	-	10,18	-	4,38	7,22	90,2	89,7	88,4	0,80	0,02982	53,0	71
	Q4H132S2DE	Aluminium	7,50	10	3545	12,40	20,2	-	10,55	-	4,37	7,38	91,7	91,3	90,1	0,84	0,03326	59,0	72
	Q4H160M2D	Aluminium	11,00	15	3575	19,20	29,5	-	9,26	-	3,10	6,63	92,4	92,4	90,6	0,77	0,04117	88,0	74
	Q4H160M2DE	Aluminium	15,00	20	3570	25,50	40,2	-	11,75	-	4,47	8,05	92,4	92,2	91,0	0,80	0,04578	95,0	75
	Q4H160L2D	Aluminium	18,50	25	3570	31,60	49,6	-	10,82	-	7,12	6,90	93,0	92,7	91,7	0,79	0,05575	106,0	75
	Q4H180M2B	Aluminium	22,00	30	3575	34,10	59,0	-	9,04	-	5,61	6,09	93,0	92,9	91,8	0,87	0,09831	142,0	76
	Q4H200L2D	Aluminium	30,00	40	3575	46,50	80,2	-	13,62	-	3,72	7,11	93,6	93,2	92,2	0,87	0,11383	166,0	77
	Q4H200L2E	Aluminium	45,00	50	3569	68,40	120,4	-	10,94	-	3,70	6,87	94,5	94,6	94,0	0,90	0,14770	200,0	77
	Q4H225M2D	Aluminium	45,00	65	3571	66,80	120,1	-	8,30	-	1,60	4,00	94,5	94,3	93,6	0,89	0,23500	240,0	81
	Q4HP250M2D	Cast Iron	55,00	75	3583	79,60	146,7	-	7,21	-	2,86	3,84	94,5	93,9	92,9	0,91	0,35166	537,0	72
	Q4HG280M2C	Cast Iron	75,00	100	3584	107,40	200,5	-	7,30	-	2,80	5,90	95,0	94,5	93,2	0,93	1,17890	653,0	82
	Q4HG280M2D	Cast Iron	90,00	125	3586	128,40	239,8	-	8,50	-	3,50	7,70	95,4	95,0	93,7	0,92	1,26380	680,0	82
	***Q4HG315S2C	Cast Iron	110,00	150															
	***Q4HG315M2B	Cast Iron	132,00	180															
	***Q4HG315L2A	Cast Iron	160,00	215															
	***Q4HG315L2C	Cast Iron	200,00	285															
4 pole 1800 rpm																			
265/460 V	Q4E63M4B	Aluminium	0,12		1725	0,36	0,7	3,98	-	3,44	-	4,36	70,0	64,7	58,0	0,61		4,7	
	Q4E63M4C	Aluminium	0,18	1/4	1732	0,51	1,0	5,74	-	4,79	-	5,62	74,0	72,1	66,3	0,58		5,7	
	Q4E71M4B	Aluminium	0,25	1/3	1753	0,70	1,4	5,40	-	3,60	-	4,80	77,0	72,6	67,0	0,61	0,00095	7,0	48
	Q4E71M4C	Aluminium	0,37	1/2	1747	0,91	2,0	5,82	-	4,15	-	5,10	81,5	78,3	74,1	0,65		9,3	
	Q4H80M4D	Aluminium	0,55	3/4	1767	1,25	3,0	7,77	-	4,16	-	6,11	84,0	81,5	77,8	0,69		11,7	
	Q4H80M4E	Aluminium	0,75	1	1758	1,53	4,1	6,60	-	2,50	-	3,50	85,5	83,7	81,0	0,73	0,00306	13,9	55
	Q4H90L4D	Aluminium	1,10	1,5	1766	2,59	5,9	7,20	-	3,50	-	4,50	87,5	85,7	81,7	0,62	0,00526	20,0	54
	Q4H90L4DE	Aluminium	1,50	2	1763	3,20	8,1	9,00	-	3,80	-	4,90	88,5	87,0	83,7	0,68	0,00691	24,5	57
	Q4H100L4D	Aluminium	2,20	3	1765	4,50	11,9	8,00	-	2,80	-	4,20				0,70	0,01059	29,8	59
	***Q4H100L4E	Aluminium		4															
460/795 V	Q4H112M4E	Aluminium	4,00	5,5	1758	4,20	21,7	-	7,80	-	2,70	3,70	91,0	90,3	89,6	0,76	0,01527	40,0	60
	Q4H132S4C	Aluminium	5,50	7,5	1778	11,60	34,4	-	8,70	-	2,40	4,00	92,4	91,5	90,1	0,75	0,03847	57,0	63
	Q4H132M4DE	Aluminium	7,50	10	1777	12,90	44,5	-	7,78	-	2,90	5,16	92,4	91,8	90,9	0,79	0,05444	78,0	64
	Q4H160M4D	Aluminium	11,00	15	1781	20,00	59,0	-	7,64	-	3,11	4,76	93,6	93,3	92,4	0,74	0,09146	99,5	65
	Q4H160L4C	Aluminium	15,00	20	1781	29,70	80,3	-	7,41	-	2,57	4,63	94,1	93,0	92,1	0,68	0,10511	116,0	66
	Q4H180L4B	Aluminium	18,50	25	1786	31,40	98,9	-	8,52	-	3,07	3,97	94,5	94,4	94,3	0,78	0,11398	154,0	69
	Q4H180L4C	Aluminium	22,00	30	1785	40,00	117,6	-	9,91	-	3,59	5,16	94,5	94,1	92,4	0,73	0,22166	182,0	69
	Q4H200L4D	Aluminium	22,00	30	1783	46,20	160,8	-	7,64	-	2,36	5,37	95,0	95,3	95,0	0,85		190,0	
	Q4H225M4D	Aluminium	37,00	50	1787	60,50	197,7	-	7,60	-	2,20	4,20	95,4	95,0	94,4	0,81	0,36400	246,0	72
	Q4H225M4E	Aluminium	45,00	65	1784	77,20	240,9	-	7,10	-	2,20	4,20	95,4	94,9	94,4	0,77	0,43500	272,0	72
	Q4HP250M4E	Cast Iron	55,00	75	1792	103,00	346,9	-	7,56	-	2,57	2,90				0,84	0,35166	537,0	74
	Q4HG280M4C	Cast Iron	75,00	100	1793	108,80	400,9	-	7,10	-	2,10	3,30	96,2	96,0	95,3	0,90	1,72100	694,0	73
	Q4HG280M4D	Cast Iron	90,00	125	1794	146,40	480,7	-	7,50	-	2,70	4,50	96,2	96,1	95,3	0,81	1,84140	694,0	73
	***Q4HG315S4C	Cast Iron	110,00	150															
	***Q4HG315M4B	Cast Iron	132,00	180															
	***Q4HG315L4A	Cast Iron	160,00	215															
	***Q4HG315L4C	Cast Iron	200,00	285															

* According to IEC 60034-2-1
** The sound pressure measurements are taken 1m away from the motor
** Tolerance +3 dBA
*** Please consult with us.

IE4 THREE PHASE ALUMINIUM MOTORS

DIMENSION - B3

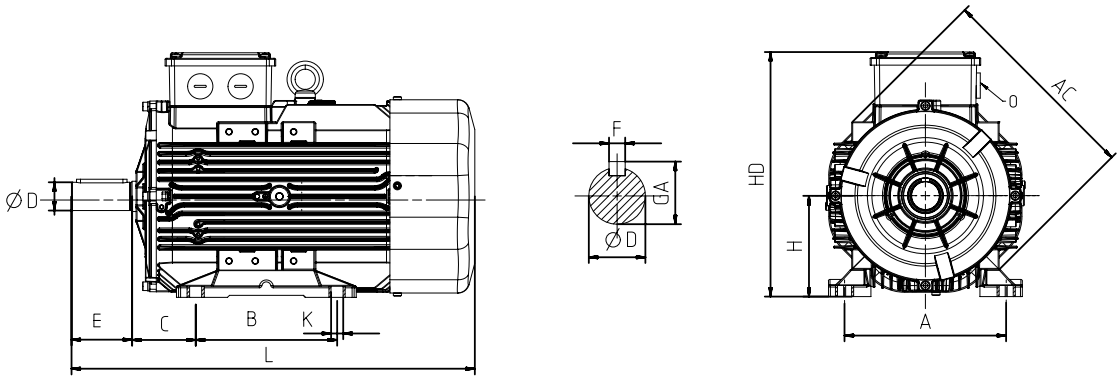

Power [kW]	Number of Poles	Motor Type	Housing Type	Main Dimensions			Foot Mounted Motors						Shaft				Bearing		Seal	
				AC	L	O	B	A	H	HD	K	C	D	E	GA	F	Drive Side	Non drive Side	Drive Side	Non drive Side
0,12	4	Q4E63M4B	Aluminium	123	220	1xM20	80	100	63	162	7,00	40	11	23	12,5	4	6201-ZZ	6201-ZZ	12*22*7	12*22*7
0,18	2	Q4E63M2B	Aluminium	123	220	1xM20	80	100	63	162	7,00	40	11	23	12,5	4	6201-ZZ	6201-ZZ	12*22*7	12*22*7
0,18	4	Q4E63M4C	Aluminium	123	234	1xM20	80	100	63	162	7,00	40	11	23	12,5	4	6201-ZZ	6201-ZZ	12*22*7	12*22*7
0,25	2	Q4E63M2C	Aluminium	123	234	1xM20	80	100	63	162	7,00	40	11	23	12,5	4	6201-ZZ	6201-ZZ	12*22*7	12*22*7
0,25	4	Q4E71M4B	Aluminium	138	253	1xM20	90	112	71	190	7,00	45	14	30	16	5	6202-ZZ	6202-ZZ	15*24*5	15*24*5
0,37	2	Q4E71M2B	Aluminium	138	253	1xM20	90	112	71	190	7,00	45	14	30	16	5	6202-ZZ	6202-ZZ	15*24*5	15*24*5
0,37	4	Q4E71M4C	Aluminium	138	262	1xM20	90	112	71	190	7,00	45	14	30	16	5	6202-ZZ	6202-ZZ	15*24*5	15*24*5
0,55	2	Q4E71M2C	Aluminium	138	253	1xM20	90	112	71	190	7,00	45	14	30	16	5	6202-ZZ	6202-ZZ	15*24*5	15*24*5
0,55	4	Q4H80M4D	Aluminium	158	268	1xM20	100	125	80	216	10,00	50	19	40	21,5	6	6204-ZZ	6204-ZZ	20*30*7	20*30*7
0,75	2	Q4H80M2D	Aluminium	158	268	1xM20	100	125	80	216	10,00	50	19	40	21,5	6	6204-ZZ	6204-ZZ	20*30*7	20*30*7
0,75	4	Q4H80M4E	Aluminium	158	293	1xM20	100	125	80	216	10,00	50	19	40	21,5	6	6204-ZZ	6204-ZZ	20*30*7	20*30*7
1,10	2	Q4H80M2DE	Aluminium	158	293	1xM20	100	125	80	216	10,00	50	19	40	21,5	6	6204-ZZ	6204-ZZ	20*30*7	20*30*7
1,10	4	Q4H90L4D	Aluminium	172	344	1xM25	100-125	140	90	223	10,00	56	24	50	27	8	6305-ZZ	6205-ZZ	25*40*7	25*40*7
1,50	2	Q4H90L2D	Aluminium	172	344	1xM25	100-125	140	90	223	10,00	56	24	50	27	8	6305-ZZ	6205-ZZ	25*40*7	25*40*7
1,50	4	Q4H90L4DE	Aluminium	172	379	1xM25	100-125	140	90	223	10,00	56	24	50	27	8	6305-ZZ	6205-ZZ	25*40*7	25*40*7
2,20	2	Q4H90L2E	Aluminium	172	344	1xM25	100-125	140	90	223	10,00	56	24	50	27	8	6305-ZZ	6205-ZZ	25*40*7	25*40*7
2,20	4	Q4H100L4D	Aluminium	191	400	1xM25	140	160	100	243	12,00	63	28	60	31	8	6306-ZZ	6205-ZZ	30*47*7	30*47*7
3,00	2	Q4H100L2D	Aluminium	191	400	1xM25	140	160	100	243	12,00	63	28	60	31	8	6306-ZZ	6205-ZZ	30*47*7	30*47*7
3,00	4	Q4H100L4E	Aluminium	191	400	1xM25	140	160	100	243	12,00	63	28	60	31	8	6306-ZZ	6205-ZZ	30*47*7	30*47*7
4,00	2	Q4H112M2D	Aluminium	210	396	1xM25	140	190	112	265	12,00	70	28	60	31	8	6306-ZZ	6206-ZZ	30*47*7	30*47*7
4,00	4	Q4H112M4E	Aluminium	210	421	1xM25	140	190	112	266	12,00	70	28	60	31	8	6306-ZZ	6206-ZZ	30*47*7	30*47*7
5,50	2	Q4H132S2D	Aluminium	260	481	1xM32	140-178	216	132	328	12,00	89	38	80	41	10	6208-ZZ	6208-ZZ	40*62*10	40*62*10
5,50	4	Q4H132S4C	Aluminium	260	481	1xM32	140-178	216	132	328	12,00	89	38	80	41	10	6208-ZZ	6208-ZZ	40*62*10	40*62*10
7,50	2	Q4H132S2DE	Aluminium	260	481	1xM32	140-178	216	132	328	12,00	89	38	80	41	10	6208-ZZ	6208-ZZ	40*62*10	40*62*10
7,50	4	Q4H132M4DE	Aluminium	260	539	1xM32	140-178	216	132	328	12,00	89	38	80	41	10	6208-ZZ	6208-ZZ	40*62*10	40*62*10
11,00	2	Q4H160M2D	Aluminium	305	591	1xM32	210-254	254	160	378	14,50	108	42	110	45	12	6309-ZZ	6209-ZZ	45*72*10	45*72*10
11,00	4	Q4H160M4D	Aluminium	305	591	1xM32	210-254	254	160	378	14,50	108	42	110	45	12	6309-ZZ	6209-ZZ	45*72*10	45*72*10

IE4 THREE PHASE ALUMINIUM MOTORS

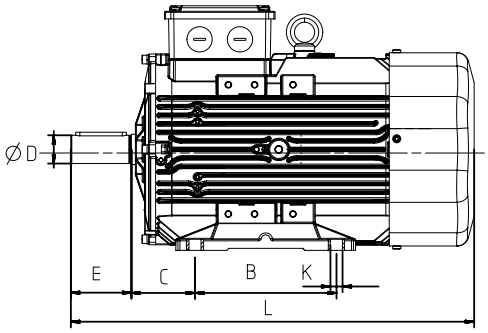

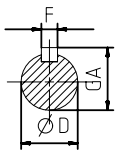

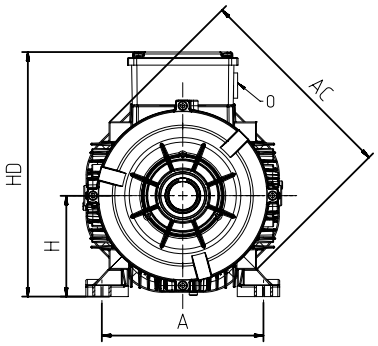

Power [kW]	Number of Poles	Motor Type	Housing Type	Main Dimensions			Foot Mounted Motors						Shaft				Bearing		Seal	
				AC	L	O	B	A	H	HD	K	C	D	E	GA	F	Drive Side	Non drive Side	Drive Side	Non drive Side
15.00	2	Q4H160M2DE	Aluminium	305	591	1xM32	210-254	254	160	378	14.50	108	42	110	45	12	6309-ZZ	6209-ZZ	45*72*10	45*72*10
15.00	4	Q4H160L4C	Aluminium	305	622	1xM32	210-254	254	160	378	14.50	108	42	110	45	12	6309-ZZ	6209-ZZ	45*72*10	45*72*10
18.50	2	Q4H160L2D	Aluminium	305	591	1xM32	210-254	254	160	378	14.50	108	42	110	45	12	6309-ZZ	6209-ZZ	45*72*10	45*72*10
18.50	4	Q4H180L4B	Aluminium	349	696	1xM40	241-279	279	180	437	14.50	121	48	110	51.5	14	6310-ZZ	6310-ZZ	50*80*10	50*80*10
22.00	2	Q4H180M2B	Aluminium	349	696	1xM40	241-279	279	180	437	14.50	121	48	110	51.5	14	6310-ZZ	6310-ZZ	50*80*10	50*80*10
22.00	4	Q4H180L4C	Aluminium	349	750	1xM40	241-279	279	180	437	14.50	121	48	110	51.5	14	6310-ZZ	6310-ZZ	50*80*10	50*80*10
30.00	2	Q4H200L2D	Aluminium	349	706	1xM50	267-305	318	200	455	18.50	133	55	110	59	16	6312-ZZ	6310-ZZ	60*90*10	50*80*10
30.00	4	Q4H200L4D	Aluminium	349	755	2xM50	267-305	318	200	455	18.50	133	55	110	59	16	6312-ZZ	6310-ZZ	60*90*10	50*80*10
37.00	2	Q4H200L2E	Aluminium	349	759	1xM50	267-305	318	200	455	18.50	133	55	110	59	16	6312-ZZ	6310-ZZ	60*90*10	50*80*10
37.00	4	Q4H225M4D	Aluminium	456	765	1xM50	286-311	356	225	485	18.50	149	60	140	64	18	6313-ZZ	6313-ZZ	65*100*13	65*100*13
45.00	2	Q4H225M2D	Aluminium	456	735	1xM50	286-311	356	225	485	18.50	149	60	110	64	18	6313-ZZ	6313-ZZ	65*100*13	65*100*13
45.00	4	Q4H225M4E	Aluminium	456	765	1xM50	286-311	356	225	485	18.50	149	60	140	65	18	6313-ZZ	6313-ZZ	65*100*13	65*100*13
55.00	2	Q4HP250M2D	Cast Iron	489	893	1xM50	311-349	406	250	616	24.00	149	65	140	69	18	6316-Z	6316-Z	80*100*10	80*100*10
55.00	4	Q4HP250M4E	Cast Iron	489	893	1xM50	311-349	406	250	616	24.00	149	65	140	69	18	6316-Z	6316-Z	80*100*10	80*100*10
75.00	2	Q4HG280M2C	Cast Iron	574	1021	1xM63	368-419	457	280	664	24.00	190	65	140	69	18	6314	6314	70*90*10	70*90*10
75.00	4	Q4HG280M4C	Cast Iron	574	1021	1xM63	368-419	457	280	664	24.00	190	75	140	79.5	20	6317	6317	85*110*12	85*110*12
90.00	2	Q4HG280M2D	Cast Iron	574	1021	1xM63	368-419	457	280	664	24.00	190	65	140	69	18	6314	6314	70*90*10	70*90*10
90.00	4	Q4HG280M4D	Cast Iron	574	1021	1xM63	368-419	457	280	664	24.00	190	75	140	79.5	20	6317	6317	85*110*12	85*110*12
110.00	2	Q4HG315S2C	Cast Iron	645	1000	2xM63	406	508	315	847	28.00	216	65	140	69	18	6316	6316	80 VA R	80 VA R
110.00	4	Q4HG315S4C	Cast Iron	645	1030	2xM63	406	508	315	847	28.00	216	80	170	85	22	6319	6319	95 VA R	95 VA R
132.00	2	Q4HG315M2B	Cast Iron	645	1070	2xM63	406-457	508	315	847	28.00	216	65	140	69	18	6316	6316	80 VA R	80 VA R
132.00	4	Q4HG315M4B	Cast Iron	645	1100	2xM63	406-457	508	315	847	28.00	216	80	170	85	22	6319	6319	95 VA R	95 VA R
160.00	2	Q4HG315L2A	Cast Iron	645	1070	2xM63	406-457	508	315	847	28.00	216	65	140	69	18	6316	6316	80 VA R	80 VA R
160.00	4	Q4HG315L4A	Cast Iron	645	1180	2xM63	457-508	508	315	847	28.00	216	80	170	85	22	6319	6319	95 VA R	95 VA R
200.00	2	Q4HG315L2C	Cast Iron	645	1150	2xM63	457-508	508	315	847	28.00	216	65	140	69	18	6316	6316	80 VA R	80 VA R
200.00	4	Q4HG315L4C	Cast Iron	645	1180	2xM63	457-508	508	315	847	28.00	216	80	170	85	22	6319	6319	95 VA R	95 VA R

IE4 THREE PHASE ALUMINIUM MOTORS

DIMENSION - B5, B35

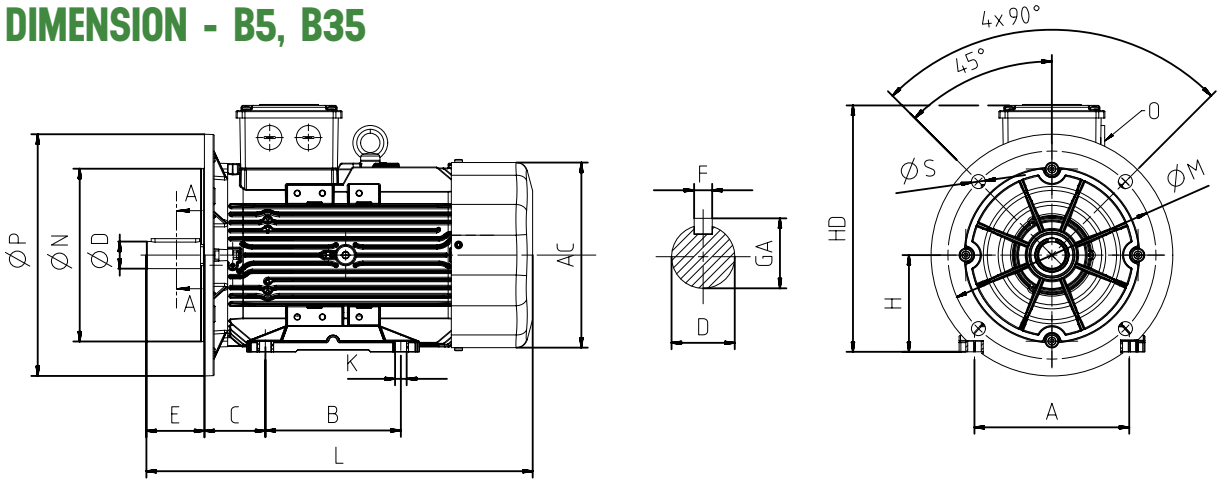

Power (kW)	Number of Poles	Motor Type	Housing Type	Main Dimensions			Foot Mounted Motors						Shaft				Bearing		Seal		Flange (FA B5, B35)				
				AC	L	O	B	A	H	HD	K	C	D	E	GA	F	Drive Side	Non drive Side	Drive Side	Non drive Side	P	N	M	R	S
0,12	4	Q4E63M4B	Aluminium	123	220,00	1xM20	80	100	63	162	7,00	40	11	23	12,5	4	6201-ZZ	6201-ZZ	12*22*7	12*22*7	140	95	115	-	10,00
0,18	2	Q4E63M2B	Aluminium	123	220,00	1xM20	80	100	63	162	7,00	40	11	23	12,5	4	6201-ZZ	6201-ZZ	12*22*7	12*22*7	140	95	115	-	10,00
0,18	4	Q4E63M4C	Aluminium	123	234,00	1xM20	80	100	63	162	7,00	40	11	23	12,5	4	6201-ZZ	6201-ZZ	12*22*7	12*22*7	140	95	115	-	10,00
0,25	2	Q4E63M2C	Aluminium	123	234,00	1xM20	80	100	63	162	7,00	40	11	23	12,5	4	6201-ZZ	6201-ZZ	12*22*7	12*22*7	140	95	115	-	10,00
0,25	4	Q4E71M4B	Aluminium	138	253,00	1xM20	90	112	71	190	7,00	45	14	30	16	5	6202-ZZ	6202-ZZ	15*24*5	15*24*5	160	110	130	-	10,00
0,37	2	Q4E71M2B	Aluminium	138	253,00	1xM20	90	112	71	190	7,00	45	14	30	16	5	6202-ZZ	6202-ZZ	15*24*5	15*24*5	160	110	130	-	10,00
0,37	4	Q4E71M4C	Aluminium	138	262,00	1xM20	90	112	71	190	7,00	45	14	30	16	5	6202-ZZ	6202-ZZ	15*24*5	15*24*5	160	110	130	-	10,00
0,55	2	Q4E71M2C	Aluminium	138	253,00	1xM20	90	112	71	190	7,00	45	14	30	16	5	6202-ZZ	6202-ZZ	15*24*5	15*24*5	160	110	130	-	10,00
0,55	4	Q4H80M4D	Aluminium	158	268,00	1xM20	100	125	80	216	10,00	50	19	40	21,5	6	6204-ZZ	6204-ZZ	20*30*7	20*30*7	200	130	165	-	12,00
0,75	2	Q4H80M2D	Aluminium	158	268,00	1xM20	100	125	80	216	10,00	50	19	40	21,5	6	6204-ZZ	6204-ZZ	20*30*7	20*30*7	200	130	165	-	12,00
0,75	4	Q4H80M4E	Aluminium	158	293,00	1xM20	100	125	80	216	10,00	50	19	40	21,5	6	6204-ZZ	6204-ZZ	20*30*7	20*30*7	200	130	165	-	12,00
1,10	2	Q4H80M2DE	Aluminium	158	293,00	1xM20	100	125	80	216	10,00	50	19	40	21,5	6	6204-ZZ	6204-ZZ	20*30*7	20*30*7	200	130	165	-	12,00
1,10	4	Q4H90L4D	Aluminium	172	344,00	1xM25	100-125	140	90	223	10,00	56	24	50	27	8	6305-ZZ	6205-ZZ	25*40*7	25*40*7	200	130	165	-	12,00
1,50	2	Q4H90L2D	Aluminium	172	344,00	1xM25	100-125	140	90	223	10,00	56	24	50	27	8	6305-ZZ	6205-ZZ	25*40*7	25*40*7	200	130	165	-	12,00
1,50	4	Q4H90L4DE	Aluminium	172	379,00	1xM25	100-125	140	90	223	10,00	56	24	50	27	8	6305-ZZ	6205-ZZ	25*40*7	25*40*7	200	130	165	-	12,00
2,20	2	Q4H90L2E	Aluminium	172	344,00	1xM25	100-125	140	90	223	10,00	56	24	50	27	8	6305-ZZ	6205-ZZ	25*40*7	25*40*7	200	130	165	-	12,00
2,20	4	Q4H100L4D	Aluminium	191	400,00	1xM25	140	160	100	243	12,00	63	28	60	31	8	6306-ZZ	6205-ZZ	30*47*7	30*47*7	250	180	215	-	14,50
3,00	2	Q4H100L2D	Aluminium	191	400,00	1xM25	140	160	100	243	12,00	63	28	60	31	8	6306-ZZ	6205-ZZ	30*47*7	30*47*7	250	180	215	-	14,50
3,00	4	Q4H100L4E	Aluminium	191	400,00	1xM25	140	160	100	243	12,00	63	28	60	31	8	6306-ZZ	6205-ZZ	30*47*7	30*47*7	250	180	215		14,50
4,00	2	Q4H112M2D	Aluminium	210	396,00	1xM25	140	190	112	265	12,00	70	28	60	31	8	6306-ZZ	6206-ZZ	30*47*7	30*47*7	250	180	215	-	14,50
4,00	4	Q4H112M4E	Aluminium	210	421,00	1xM25	140	190	112	266	12,00	70	28	60	31	8	6306-ZZ	6206-ZZ	30*47*7	30*47*7	250	180	215	-	14,50
5,50	2	Q4H132S2D	Aluminium	260	481,00	1xM32	140-178	216	132	328	12,00	89	38	80	41	10	6208-ZZ	6208-ZZ	40*62*10	40*62*10	300	230	265	-	14,50
5,50	4	Q4H132S4C	Aluminium	260	481,00	1xM32	140-178	216	132	328	12,00	89	38	80	41	10	6208-ZZ	6208-ZZ	40*62*10	40*62*10	300	230	265	-	14,50
7,50	2	Q4H132S2DE	Aluminium	260	481,00	1xM32	140-178	216	132	328	12,00	89	38	80	41	10	6208-ZZ	6208-ZZ	40*62*10	40*62*10	300	230	265	-	14,50
7,50	4	Q4H132M4DE	Aluminium	260	539,00	1xM32	140-178	216	132	328	12,00	89	38	80	41	10	6208-ZZ	6208-ZZ	40*62*10	40*62*10	300	230	265	-	14,50
11,00	2	Q4H160M2D	Aluminium	305	591,00	1xM32	210-254	254	160	378	14,50	108	42	110	45	12	6309-ZZ	6209-ZZ	45*72*10	45*72*10	350	250	300	-	18,50
11,00	4	Q4H160M4D	Aluminium	305	591,00	1xM32	210-254	254	160	378	14,50	108	42	110	45	12	6309-ZZ	6209-ZZ	45*72*10	45*72*10	350	250	300	-	18,50

IE4 THREE PHASE ALUMINIUM MOTORS

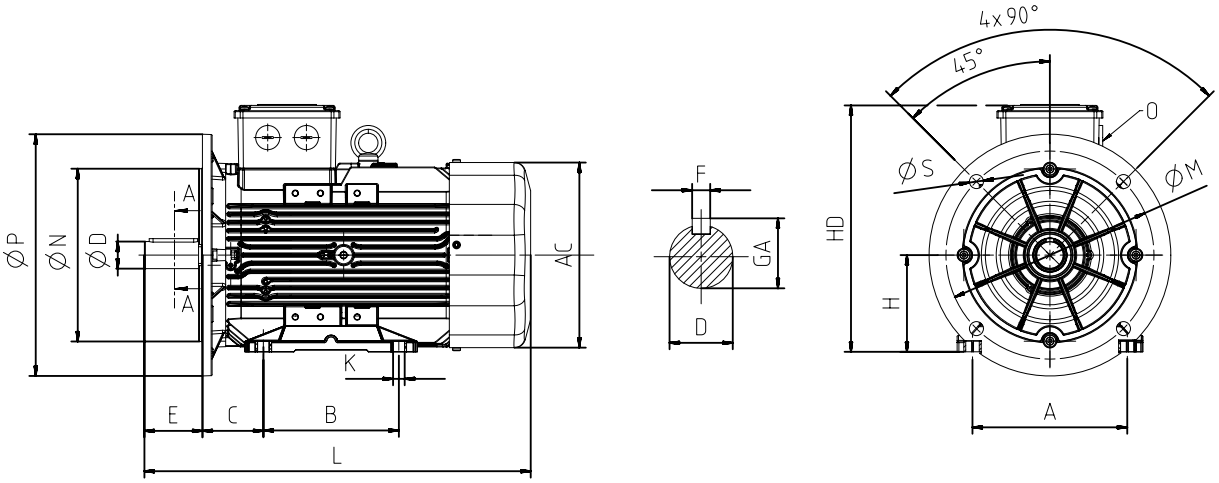

Power (kW)	Number of Poles	Motor Type	Housing Type	Main Dimensions			Foot Mounted Motors						Shaft				Bearing		Seal		Flange (FA B5, B35)				
				AC	L	O	B	A	H	HD	K	C	D	E	GA	F	Drive Side	Non drive Side	Drive Side	Non drive Side	P	N	M	R	S
15,00	2	Q4H160M2DE	Aluminium	305	591,00	1xM32	210-254	254	160	378	14,50	108	42	110	45	12	6309-ZZ	6209-ZZ	45*72*10	45*72*10	350	250	300	-	18,50
15,00	4	Q4H160L4C	Aluminium	305	622,00	1xM32	210-254	254	160	378	14,50	108	42	110	45	12	6309-ZZ	6209-ZZ	45*72*10	45*72*10	350	250	300	-	18,50
18,50	2	Q4H160L2D	Aluminium	305	591,00	1xM32	210-254	254	160	378	14,50	108	42	110	45	12	6309-ZZ	6209-ZZ	45*72*10	45*72*10	350	250	300	-	18,50
18,50	4	Q4H180L4B	Aluminium	349	696,00	1xM40	241-279	279	180	437	14,50	121	48	110	51,5	14	6310-ZZ	6310-ZZ	50*80*10	50*80*10	350	250	300	-	18,50
22,00	2	Q4H180M2B	Aluminium	349	696,00	1xM40	241-279	279	180	437	14,50	121	48	110	51,5	14	6310-ZZ	6310-ZZ	50*80*10	50*80*10	350	250	300	-	18,50
22,00	4	Q4H180L4C	Aluminium	349	750,00	1xM40	241-279	279	180	437	14,50	121	48	110	51,5	14	6310-ZZ	6310-ZZ	50*80*10	50*80*10	350	250	300	-	18,50
30,00	2	Q4H200L2D	Aluminium	349	706,00	1xM50	267-305	318	200	455	18,50	133	55	110	59	16	6312-ZZ	6310-ZZ	60*90*10	50*80*10	400	300	350	-	18,50
30,00	4	Q4H200L4D	Aluminium	349	755,50	2xM50	267-305	318	200	455	18,50	133	55	110	59	16	6312-ZZ	6310-ZZ	60*90*10	50*80*10	400	300	350	-	18,50
37,00	2	Q4H200L2E	Aluminium	349	759,00	1xM50	267-305	318	200	455	18,50	133	55	110	59	16	6312-ZZ	6310-ZZ	60*90*10	50*80*10	400	300	350	-	18,50
37,00	4	Q4H225M4D	Aluminium	456	765,00	1xM50	286-311	356	225	485	18,50	149	60	140	64	18	6313-ZZ	6313-ZZ	65*100*13	65*100*13	450	350	400	-	18,50
45,00	2	Q4H225M2D	Aluminium	456	735,00	1xM50	286-311	356	225	485	18,50	149	60	110	64	18	6313-ZZ	6313-ZZ	65*100*13	65*100*13	450	350	400	-	18,50
45,00	4	Q4H225M4E	Aluminium	456	765,00	1xM50	286-311	356	225	485	18,50	149	60	140	65	18	6313-ZZ	6313-ZZ	65*100*13	65*100*13	450	350	400	-	18,50
55,00	2	Q4HP250M2D	Cast Iron	489	893,00	1xM50	311-349	406	250	616	24,00	149	65	140	69	18	6316-Z	6316-Z	80*100*10	80*100*10	550	450	500	-	18,50
55,00	4	Q4HP250M4E	Cast Iron	489	893,00	1xM50	311-349	406	250	616	24,00	149	65	140	69	18	6316-Z	6316-Z	80*100*10	80*100*10	550	450	500	-	18,50
75,00	2	Q4HG280M2C	Cast Iron	574	1021,00	1xM63	368-419	457	280	664	24,00	190	65	140	69	18	6314	6314	70*90*10	70*90*10	550	450	500	-	18,50
75,00	4	Q4HG280M4C	Cast Iron	574	1021,00	1xM63	368-419	457	280	664	24,00	190	75	140	79,5	20	6317	6317	85*110*12	85*110*12	550	450	500	-	18,50
90,00	2	Q4HG280M2D	Cast Iron	574	1021,00	1xM63	368-419	457	280	664	24,00	190	65	140	69	18	6314	6314	70*90*10	70*90*10	550	450	500	-	18,50
90,00	4	Q4HG280M4D	Cast Iron	574	1021,00	1xM63	368-419	457	280	664	24,00	190	75	140	79,5	20	6317	6317	85*110*12	85*110*12	550	450	500	-	18,50
110,00	2	Q4HG315S2C	Cast Iron	645	1000,00	2xM63	406	508	315	847	28,00	216	65	140	69	18	6316	6316	80 VA R	80 VA R	660	550	600	-	24,00
110,00	4	Q4HG315S4C	Cast Iron	645	1030,00	2xM63	406	508	315	847	28,00	216	80	170	85	22	6319	6319	95 VA R	95 VA R	660	550	600	-	24,00
132,00	2	Q4HG315M2B	Cast Iron	645	1070,00	2xM63	406-457	508	315	847	28,00	216	65	140	69	18	6316	6316	80 VA R	80 VA R	660	550	600	-	24,00
132,00	4	Q4HG315M4B	Cast Iron	645	1100,00	2xM63	406-457	508	315	847	28,00	216	80	170	85	22	6319	6319	95 VA R	95 VA R	660	550	600	-	24,00
160,00	2	Q4HG315L2A	Cast Iron	645	1070,00	2xM63	406-457	508	315	847	28,00	216	65	140	69	18	6316	6316	80 VA R	80 VA R	660	550	600	-	24,00
160,00	4	Q4HG315L4A	Cast Iron	645	1180,00	2xM63	457-508	508	315	847	28,00	216	80	170	85	22	6319	6319	95 VA R	95 VA R	660	550	600	-	24,00
200,00	2	Q4HG315L2C	Cast Iron	645	1150,00	2xM63	457-508	508	315	847	28,00	216	65	140	69	18	6316	6316	80 VA R	80 VA R	660	550	600	-	24,00
200,00	4	Q4HG315L4C	Cast Iron	645	1180,00	2xM63	457-508	508	315	847	28,00	216	80	170	85	22	6319	6319	95 VA R	95 VA R	660	550	600	-	24,00

IE4 THREE PHASE ALUMINIUM MOTORS

DIMENSION - B14a, B34a

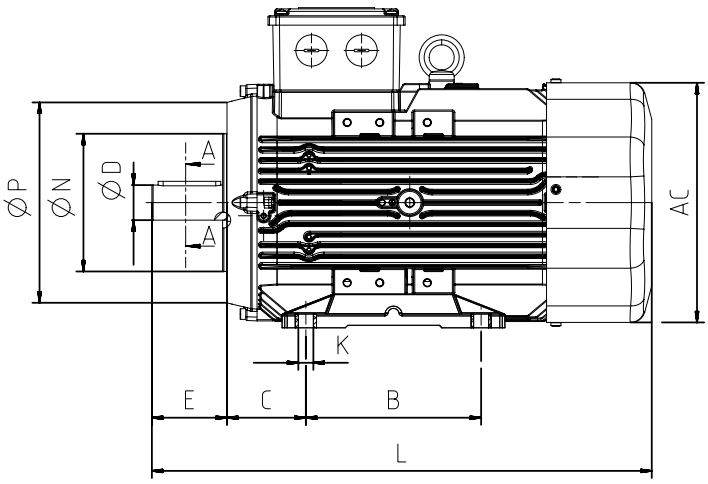

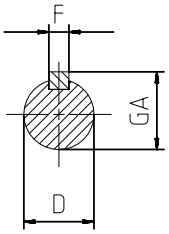

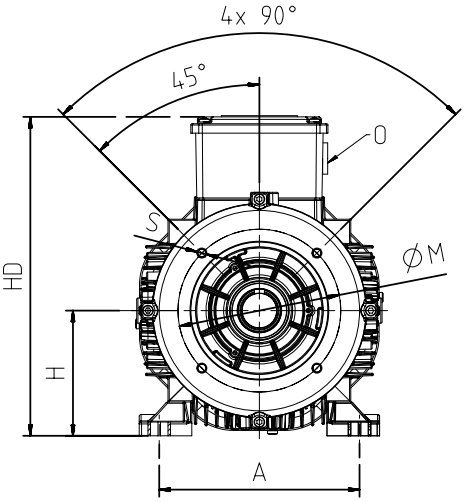

Power (kW)	Number of Poles	Motor Type	Housing Type	Main Dimensions			Foot Mounted Motors						Shaft				Bearing		Seal		Flange (FC B14a, B34a)				
				AC	L	O	B	A	H	HD	K	C	D	E	GA	F	Drive Side	Non drive Side	Drive Side	Non drive Side	P	N	M	R	S
0,12	4	Q4E63M4B	Aluminium	123	220	1xM20	80	100	63	162	7	40	11	23	12,5	4	6201-ZZ	6201-ZZ	12*22*7	12*22*7	90	60	75	-	M5
0,18	2	Q4E63M2B	Aluminium	123	220	1xM20	80	100	63	162	7	40	11	23	12,5	4	6201-ZZ	6201-ZZ	12*22*7	12*22*7	90	60	75	-	M5
0,18	4	Q4E63M4C	Aluminium	123	234	1xM20	80	100	63	162	7	40	11	23	12,5	4	6201-ZZ	6201-ZZ	12*22*7	12*22*7	90	60	75	-	M5
0,25	2	Q4E63M2C	Aluminium	123	234	1xM20	80	100	63	162	7	40	11	23	12,5	4	6201-ZZ	6201-ZZ	12*22*7	12*22*7	90	60	75	-	M5
0,25	4	Q4E71M4B	Aluminium	138	253	1xM20	90	112	71	190	7	45	14	30	16	5	6202-ZZ	6202-ZZ	15*24*5	15*24*5	105	70	85	-	M6
0,37	2	Q4E71M2B	Aluminium	138	253	1xM20	90	112	71	190	7	45	14	30	16	5	6202-ZZ	6202-ZZ	15*24*5	15*24*5	105	70	85	-	M6
0,37	4	Q4E71M4C	Aluminium	138	262	1xM20	90	112	71	190	7	45	14	30	16	5	6202-ZZ	6202-ZZ	15*24*5	15*24*5	105	70	85	-	M6
0,55	2	Q4E71M2C	Aluminium	138	253	1xM20	90	112	71	190	7	45	14	30	16	5	6202-ZZ	6202-ZZ	15*24*5	15*24*5	105	70	85	-	M6
0,55	4	Q4H80M4D	Aluminium	158	268	1xM20	100	125	80	216	10	50	19	40	21,5	6	6204-ZZ	6204-ZZ	20*30*7	20*30*7	120	80	100	-	M6
0,75	2	Q4H80M2D	Aluminium	158	268	1xM20	100	125	80	216	10	50	19	40	21,5	6	6204-ZZ	6204-ZZ	20*30*7	20*30*7	120	80	100	-	M6
0,75	4	Q4H80M4E	Aluminium	158	293	1xM20	100	125	80	216	10	50	19	40	21,5	6	6204-ZZ	6204-ZZ	20*30*7	20*30*7	120	80	100	-	M6
1,10	2	Q4H80M2DE	Aluminium	158	293	1xM20	100	125	80	216	10	50	19	40	21,5	6	6204-ZZ	6204-ZZ	20*30*7	20*30*7	120	80	100	-	M6
1,10	4	Q4H90L4D	Aluminium	172	344	1xM25	100-125	140	90	223	10	56	24	50	27	8	6305-ZZ	6205-ZZ	25*40*7	25*40*7	140	95	115	-	M8
1,50	2	Q4H90L2D	Aluminium	172	344	1xM25	100-125	140	90	223	10	56	24	50	27	8	6305-ZZ	6205-ZZ	25*40*7	25*40*7	140	95	115	-	M8
1,50	4	Q4H90L4DE	Aluminium	172	379	1xM25	100-125	140	90	223	10	56	24	50	27	8	6305-ZZ	6205-ZZ	25*40*7	25*40*7	140	95	115	-	M8
2,20	2	Q4H90L2E	Aluminium	172	344	1xM25	100-125	140	90	223	10	56	24	50	27	8	6305-ZZ	6205-ZZ	25*40*7	25*40*7	140	95	115	-	M8
2,20	4	Q4H100L4D	Aluminium	191	400	1xM25	140	160	100	243	12	63	28	60	31	8	6306-ZZ	6205-ZZ	30*47*7	30*47*7	160	110	130	-	M8
3,00	2	Q4H100L2D	Aluminium	191	400	1xM25	140	160	100	243	12	63	28	60	31	8	6306-ZZ	6205-ZZ	30*47*7	30*47*7	160	110	130	-	M8
3,00	4	Q4H100L4E	Aluminium	191	400	1xM25	140	160	100	243	12	63	28	60	31	8	6306-ZZ	6205-ZZ	30*47*7	30*47*7	160	110	130	-	M8
4,00	2	Q4H112M2D	Aluminium	210	396	1xM25	140	190	112	265	12	70	28	60	31	8	6306-ZZ	6206-ZZ	30*47*7	30*47*7	160	110	130	-	M8
4,00	4	Q4H112M4E	Aluminium	210	421	1xM25	140	190	112	266	12	70	28	60	31	8	6306-ZZ	6206-ZZ	30*47*7	30*47*7	160	110	130	-	M8
5,50	2	Q4H132S2D	Aluminium	260	481	1xM32	140-178	216	132	328	12	89	38	80	41	10	6208-ZZ	6208-ZZ	40*62*10	40*62*10	200	130	165	-	M10
5,50	4	Q4H132S4C	Aluminium	260	481	1xM32	140-178	216	132	328	12	89	38	80	41	10	6208-ZZ	6208-ZZ	40*62*10	40*62*10	200	130	165	-	M10
7,50	2	Q4H132S2DE	Aluminium	260	481	1xM32	140-178	216	132	328	12	89	38	80	41	10	6208-ZZ	6208-ZZ	40*62*10	40*62*10	200	130	165	-	M10
7,50	4	Q4H132M4DE	Aluminium	260	539	1xM32	140-178	216	132	328	12	89	38	80	41	10	6208-ZZ	6208-ZZ	40*62*10	40*62*10	200	130	165	-	M10

IE4 THREE PHASE ALUMINIUM MOTORS

DIMENSION - B14b, B34b

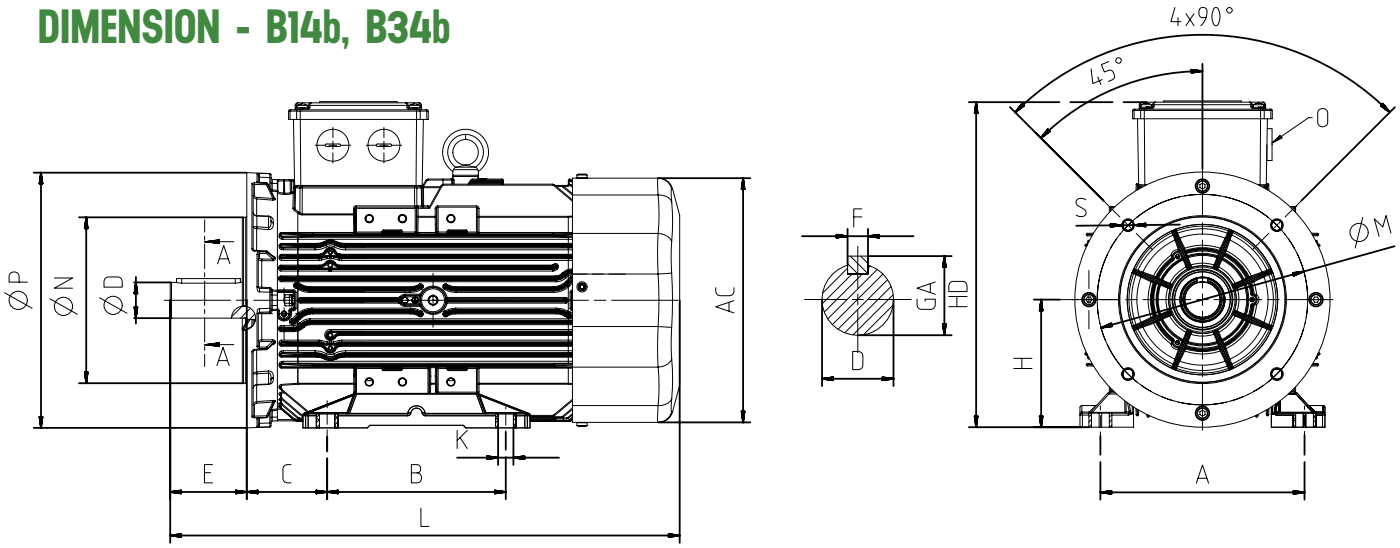

Power (kW)	Number of Poles	Motor Type	Housing Type	Main Dimensions			Foot Mounted Motors						Shaft				Bearing		Seal		Flangş Tipi (FB B14b, B34b)				
				AC	L	O	B	A	H	HD	K	C	D	E	GA	F	Drive Side	Non drive Side	Drive Side	Non drive Side	P	N	M	R	S
0,12	4	Q4E63M4B	Aluminium	123	220	1xM20	80	100	63	162	7	40	11	23	12,5	4	6201-ZZ	6201-ZZ	12*22*7	12*22*7	120	80	100	-	M6
0,18	2	Q4E63M2B	Aluminium	123	220	1xM20	80	100	63	162	7	40	11	23	12,5	4	6201-ZZ	6201-ZZ	12*22*7	12*22*7	120	80	100	-	M6
0,18	4	Q4E63M4C	Aluminium	123	234	1xM20	80	100	63	162	7	40	11	23	12,5	4	6201-ZZ	6201-ZZ	12*22*7	12*22*7	120	80	100	-	M6
0,25	2	Q4E63M2C	Aluminium	123	234	1xM20	80	100	63	162	7	40	11	23	12,5	4	6201-ZZ	6201-ZZ	12*22*7	12*22*7	120	80	100	-	M6
0,25	4	Q4E71M4B	Aluminium	138	253	1xM20	90	112	71	190	7	45	14	30	16	5	6202-ZZ	6202-ZZ	15*24*5	15*24*5	140	95	115	-	M8
0,37	2	Q4E71M2B	Aluminium	138	253	1xM20	90	112	71	190	7	45	14	30	16	5	6202-ZZ	6202-ZZ	15*24*5	15*24*5	140	95	115	-	M8
0,37	4	Q4E71M4C	Aluminium	138	262	1xM20	90	112	71	190	7	45	14	30	16	5	6202-ZZ	6202-ZZ	15*24*5	15*24*5	140	95	115	-	M8
0,55	2	Q4E71M2C	Aluminium	138	253	1xM20	90	112	71	190	7	45	14	30	16	5	6202-ZZ	6202-ZZ	15*24*5	15*24*5	140	95	115	-	M8
0,55	4	Q4H80M4D	Aluminium	158	268	1xM20	100	125	80	216	10	50	19	40	21,5	6	6204-ZZ	6204-ZZ	20*30*7	20*30*7	160	110	130	-	M8
0,75	2	Q4H80M2D	Aluminium	158	268	1xM20	100	125	80	216	10	50	19	40	21,5	6	6204-ZZ	6204-ZZ	20*30*7	20*30*7	160	110	130	-	M8
0,75	4	Q4H80M4E	Aluminium	158	293	1xM20	100	125	80	216	10	50	19	40	21,5	6	6204-ZZ	6204-ZZ	20*30*7	20*30*7	160	110	130	-	M8
1,10	2	Q4H80M2DE	Aluminium	158	293	1xM20	100	125	80	216	10	50	19	40	21,5	6	6204-ZZ	6204-ZZ	20*30*7	20*30*7	160	110	130	-	M8
1,10	4	Q4H90L4D	Aluminium	172	344	1xM25	100-125	140	90	223	10	56	24	50	27	8	6305-ZZ	6205-ZZ	25*40*7	25*40*7	160	110	130	-	M8
1,50	2	Q4H90L2D	Aluminium	172	344	1xM25	100-125	140	90	223	10	56	24	50	27	8	6305-ZZ	6205-ZZ	25*40*7	25*40*7	160	110	130	-	M8
1,50	4	Q4H90L4DE	Aluminium	172	379	1xM25	100-125	140	90	223	10	56	24	50	27	8	6305-ZZ	6205-ZZ	25*40*7	25*40*7	160	110	130	-	M8
2,20	2	Q4H90L2E	Aluminium	172	344	1xM25	100-125	140	90	223	10	56	24	50	27	8	6305-ZZ	6205-ZZ	25*40*7	25*40*7	160	110	130	-	M8
2,20	4	Q4H100L4D	Aluminium	191	400	1xM25	140	160	100	243	12	63	28	60	31	8	6306-ZZ	6205-ZZ	30*47*7	30*47*7	200	130	165	-	M10
3,00	2	Q4H100L2D	Aluminium	191	400	1xM25	140	160	100	243	12	63	28	60	31	8	6306-ZZ	6205-ZZ	30*47*7	30*47*7	200	130	165	-	M10
3,00	4	Q4H100L4E	Aluminium	191	400	1xM25	140	160	100	243	12	63	28	60	31	8	6306-ZZ	6205-ZZ	30*47*7	30*47*7	200	130	165	-	M10
4,00	2	Q4H112M2D	Aluminium	210	396	1xM25	140	190	112	265	12	70	28	60	31	8	6306-ZZ	6206-ZZ	30*47*7	30*47*7	200	130	165	-	M10
4,00	4	Q4H112M4E	Aluminium	210	421	1xM25	140	190	112	266	12	70	28	60	31	8	6306-ZZ	6206-ZZ	30*47*7	30*47*7	200	130	165	-	M10
5,50	2	Q4H132S2D	Aluminium	260	481	1xM32	140-178	216	132	328	12	89	38	80	41	10	6208-ZZ	6208-ZZ	40*62*10	40*62*10	250	180	215	-	M12
5,50	4	Q4H132S4C	Aluminium	260	481	1xM32	140-178	216	132	328	12	89	38	80	41	10	6208-ZZ	6208-ZZ	40*62*10	40*62*10	250	180	215	-	M12
7,50	2	Q4H132S2DE	Aluminium	260	481	1xM32	140-178	216	132	328	12	89	38	80	41	10	6208-ZZ	6208-ZZ	40*62*10	40*62*10	250	180	215	-	M12
7,50	4	Q4H132M4DE	Aluminium	260	539	1xM32	140-178	216	132	328	12	89	38	80	41	10	6208-ZZ	6208-ZZ	40*62*10	40*62*10	250	180	215	-	M12

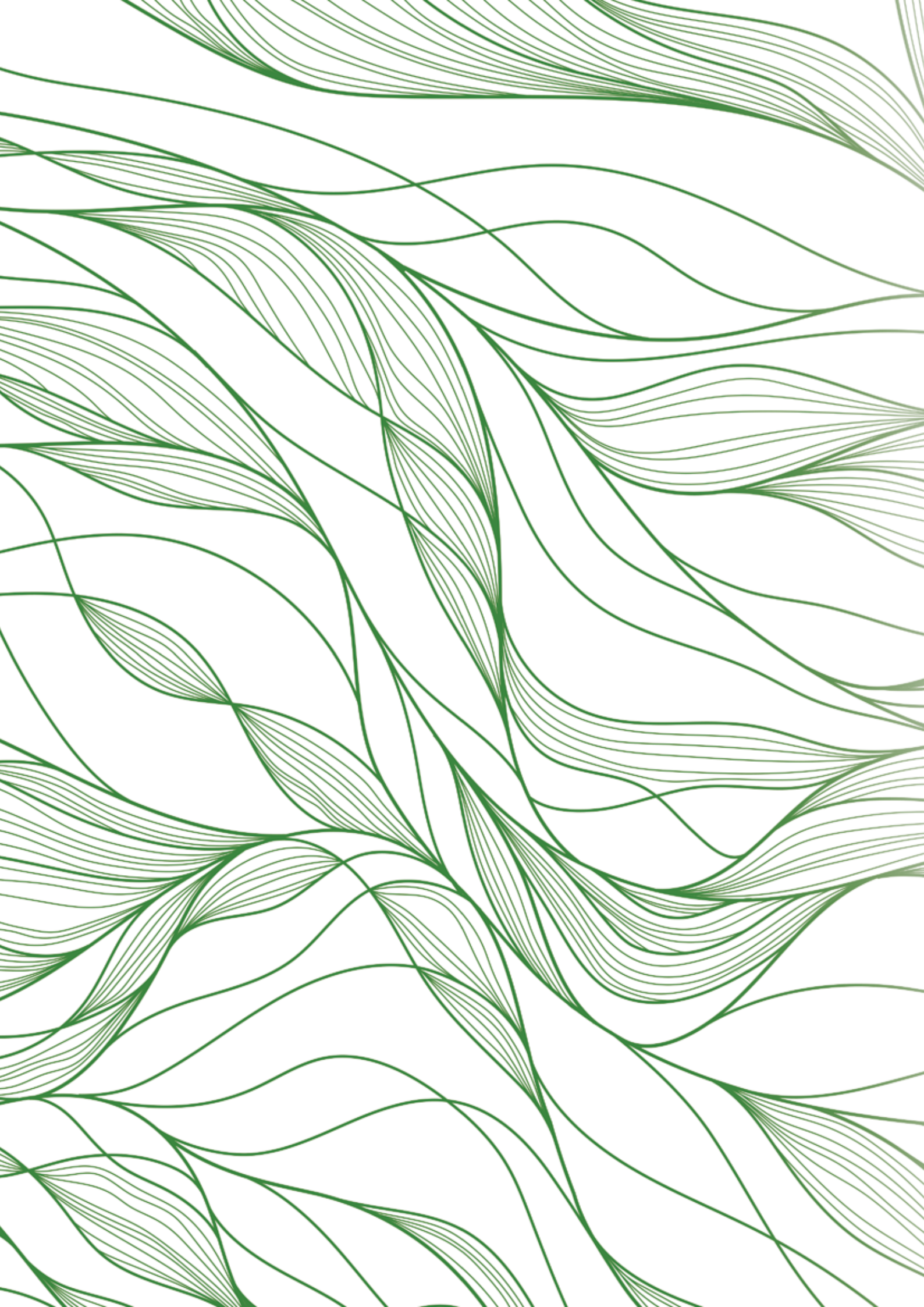

IE3 THREE PHASE ALUMINIUM MOTORS

IE3 THREE PHASE ALUMINIUM MOTORS

ELECTRICAL CHARACTERISTICS @ 50 Hz

		MOTOR TYPE	HOUSING TYPE	RATED VALUES					STARTING VALUES				Breakdown Torque Ratio	EFFICIENCY *			Cosφ	J	Weight (B3)	Sound Pressure Level
				Power		SPEED	CURRENT	TORQUE	CURRENT IA / IN		TORQUE MA / MN			η %						
				kW	HP	rpm	A (Δ/Y)	Nm	λ	Δ	λ	Δ	Mk/ Mn	4/4	3/4	2/4	4/4	kgm²	kg	dBA**
		2 pole 3000 rpm																		
230/400 V		Q3E63M2K	Aluminium	0.12	0.17	2875	0.66/0.38	0.4	4.9		2.4		3.1	60.8	57.4	50.1	0.76	0.00022	4.3	58
		Q3E63M2A	Aluminium	0.18	0.25	2780	0.86/0.50	0.6	5.0		2.8		2.8	65.9	63.3	57.9	0.87	0.00022	4.4	58
		Q3E63M2B	Aluminium	0.25	0.30	2788	1.14/0.66	0.8	5.2		2.7		2.8	69.7	68.3	63.9	0.87	0.00025	5.0	58
	C	Q3E63M2C	Aluminium	0.37	0.50	2872	1.73/1.00	1.2	7.2		4.5		4.1	73.8	72.4	67.3	0.74	0.00030	6.0	58
		Q3E71M2A	Aluminium	0.37	0.50	2785	1.39/0.80	1.2	5.8		2.9		2.9	73.8	77.0	75.0	0.88	0.00043	6.8	62
		Q3E71M2B	Aluminium	0.55	0.75	2808	2.26/1.31	1.8	6.2		3.8		3.8	77.8	74.1	69.5	0.80	0.00057	7.0	62
	C	Q3E71M2D	Aluminium	0.75	1.0	2883	3.2/1.84	2.5	8.6		4.7		4.7	80.7	80.6	77.4	0.74	0.00036	9.0	62
		Q3H80M2C	Aluminium	0.75	1.0	2890	2.8/1.6	2.4	7.8		3.1		3.7	80.7	80.4	75.7	0.85	0.00140	10.1	64
		Q3H80M2D	Aluminium	1.10	1.5	2890	3.9/2.3	3.6	8.9		4.0		4.3	82.7	82.2	79.3	0.85	0.00170	13.5	64
	C	Q3H80M2DE	Aluminium	1.50	2.0	2918	5.6/3.2	4.9	11.3		4.9		5.5	84.2	83.3	80.5	0.81	0.00224	14.5	64
		Q3H90L2C	Aluminium	1.50	2.0	2930	5.2/3.0	4.8	11.5		3.8		5.1	84.2	86.2	84.2	0.84	0.00249	17.0	66
		Q3HS90S2C	Aluminium	1.50	2.0	2918	5.6/3.2	4.9	11.3		4.9		5.5	84.2	83.3	80.5	0.81	0.00201	14.5	64
		Q3H90L2D	Aluminium	2.20	3.0	2917	7.4/4.3	7.2	8.8		2.8		3.9	85.9	86.2	85.0	0.87	0.00283	18.0	66
	C	Q3H90L2E	Aluminium	3.00	4.0	2890	10.25/5.92	9.9	9.6		3.3		4.4	87.1	87.2	86.8	0.85	0.00318	18.2	66
		Q3H100L2D	Aluminium	3.00	4.0	2930	9.9/5.7	9.8	11.7		3.8		4.6	87.1	86.5	85.1	0.89	0.00536	25.0	70
		Q3HS100L2C	Aluminium	3.00	4.0	2890	10.25/5.92	9.9	9.6		3.3		4.4	87.1	87.2	86.8	0.85	0.00310	25.0	66
400/690 V	C	Q3H100L2DE	Aluminium	4.00	5.5	2925	7.8/4.5	13.0		12.5		4.4	5.4	88.1	88.1	85.8	0.85	0.00612	28.0	70
		Q3H112M2C	Aluminium	4.00	5.5	2918	7.3/4.2	13.1		11.1		3.4	4.5	88.1	86.6	79.6	0.89	0.00604	32.0	71
		Q3HS112M2C	Aluminium	4.00	5.5	2925	7.8/4.5	13.0		12.5		4.4	5.4	88.1	88.1	85.8	0.85	0.00638	29.0	70
	SC	Q3H100L2E	Aluminium	5.50	7.5	2933	10.9/6.3	18.0		13.3		5.1	5.9	89.2	88.6	86.7	0.83	0.00612	35.0	70
	C	Q3H112M2D	Aluminium	5.50	7.5	2920	10.5/6.1	17.9		12.2		5.0	6.1	89.2	88.9	87.5	0.86	0.00741	32.0	71
		Q3H132S2C	Aluminium	5.50	7.5	2920	10.2/5.9	17.9		8.9		3.1	4.3	89.2	89.0	88.5	0.88	0.02792	50.0	73
		Q3HS132S2C	Aluminium	5.50	7.5	2920	10.5/6.1	17.9		12.2		5.0	6.1	89.2	88.9	87.5	0.86	0.00772	36.2	71
	C	Q3H112M2DE	Aluminium	7.50	10.0	2918	13.9/8.0	24.5		12.6		4.8	5.9	90.1	90.3	89.1	0.88	0.00921	41.0	71
		Q3H132S2D	Aluminium	7.50	10.0	2918	13.6/7.85	24.5		9.8		3.5	4.5	90.1	90.1	89.1	0.88	0.03091	55.5	73
		Q3HS132S2D	Aluminium	7.50	10.0	2918	13.9/8.0	24.5		12.6		4.8	5.9	90.1	90.3	89.1	0.88	0.00932	42.5	71
	C	Q3H132M2A	Aluminium	11.00	15.0	2925	20.7/11.9	35.9		9.4		3.5	5.1	91.2	91.4	90.6	0.85	0.03489	63.0	73
		Q3H160M2C	Aluminium	11.00	15.0	2965	20.3/11.7	35.5		8.1		2.4	4.2	91.2	89.9	87.6	0.87	0.04322	82.5	75
		Q3HS160M2D	Aluminium	11.00	15.0	2925	20.7/11.9	35.9		9.4		3.5	5.1	91.2	91.4	90.6	0.85	0.04015	63.0	73
	C	Q3H132M2B	Aluminium	15.00	20.0	2930	27.9/16.1	49.0		10.7		3.8	5.1	91.9	91.4	90.1	0.84	0.03489	64.0	73
		Q3H160M2D	Aluminium	15.00	20.0	2951	27.4/15.8	48.5		9.7		2.8	4.8	91.9	92.1	91.0	0.89	0.04322	88.5	75
		Q3H160L2C	Aluminium	18.50	25.0	2961	37.1/21.4	59.6		11.4		4.0	5.6	92.4	92.0	90.0	0.79	0.04809	94.8	75
	C	Q3H160L2D	Aluminium	22.00	30.0	2961	39.1/22.5	70.7		11.7		3.6	5.2	92.7	92.4	91.3	0.87	0.05540	118.0	75
		Q3H180M2A	Aluminium	22.00	30.0	2960	37.0/21.4	71.2		11.2		3.2	4.2	92.7	92.5	91.3	0.92	0.09460	135.0	76
		Q3HS180M2B	Aluminium	22.00	30.0	2961	39.1/22.5	70.7		11.7		3.6	5.2	92.7	92.4	91.3	0.87	0.05869	118.0	75
	C	Q3H180M2B	Aluminium	30.00	40.0	2969	53.3/30.8	96.5		10.7		3.1	5.1	93.3	93.1	91.7	0.88	0.10277	138.0	76
		Q3H200L2C	Aluminium	30.00	40.0	2969	54.1/31.2	96.5		10.7		3.1	5.1	93.3	93.2	92.2	0.86	0.10277	143.0	79
	C	Q3H180L2D	Aluminium	37.00	50.0	2962	61.4/35.5	118.8		10.1		2.9	4.4	93.7	94.4	94.0	0.93	0.11212	160.0	76
		Q3H200L2D	Aluminium	37.00	50.0	2962	61.4/35.5	118.8		10.1		2.9	4.4	93.7	94.4	94.0	0.93	0.11383	176.0	79
	SC	Q3H180L2DE	Aluminium	45.00	60.0	2963	74.8/43.2	145.2		10.7		3.1	5.1	94.0	93.3	92.8	0.92	0.10277	155.0	76
	C	Q3H200L2DE	Aluminium	45.00	60.0	2963	74.8/43.2	145.2		10.7		3.1	5.1	94.0	93.3	92.8	0.92	0.14770	198.6	79
		Q3E225M2B	Aluminium	45.00	60.0	2976	78.8/45.5	145.0		11.5		3.6	5.2	94.0	93.7	93.3	0.89	0.12158	218.0	81
		Q3E250M2B	Aluminium	55.00	75.0	2973	98.4/56.8	176.4		11.6		3.7	7.0	94.3	93.8	92.5	0.86	0.14216	246.2	81

* According to IEC 60034-2-1
** The sound pressure measurements are taken 1m away from the motor
** Tolerance +3 dBA

C: Compact Motor
SC: Super Compact Motor

IE3 THREE PHASE ALUMINIUM MOTORS

		MOTOR TYPE	HOUSING TYPE	RATED VALUES					STARTING VALUES				Breakdown Torque Ratio	EFFICIENCY *			Cosφ	J	Weight (B3)	Sound Pressure Level
				Power		SPEED	CURRENT	TORQUE	CURRENT IA / IN		TORQUE MA / MN			η %						
				kW	HP	rpm	A (Δ/Y)	Nm	λ	Δ	λ	Δ	Mk/ Mn	4/4	3/4	2/4	4/4	kgm²	kg	dBA**
		4 pole 1500 rpm																		
230/400 V		Q3E63M4A	Aluminium	0,12	0,17	1390	0,77/0,45	0,8	3,7		2,8		3,0	64,8	55,9	47,6	0,65	0,00022	5,0	48
		Q3E63M4B	Aluminium	0,18	0,25	1369	0,97/0,56	1,2	4,2		2,9		3,0	69,9	67,7	62,3	0,68	0,00026	4,5	48
	C	Q3E63M4C	Aluminium	0,25	0,30	1400	1,44/0,83	1,7	4,3		3,6		3,6	73,5	71,2	64,6	0,61	0,00034	5,9	48
		Q3E71M4B	Aluminium	0,25	0,30	1435	1,26/0,73	1,7	5,4		3,0		3,4	73,5	74,2	69,4	0,68	0,00081	7,1	52
		Q3E71M4C	Aluminium	0,37	0,50	1428	1,85/1,07	2,5	5,3		3,0		3,4	77,3	75,8	72,6	0,70	0,00095	7,6	52
	C	Q3E71M4E	Aluminium	0,55	0,75	1425	2,48/1,43	3,7	5,5		2,8		3,0	80,8	78,6	75,5	0,71	0,01163	9,3	52
		Q3H80M4C	Aluminium	0,55	0,75	1455	2,37/1,37	3,6	6,6		2,8		3,6	80,8	79,8	75,8	0,73	0,00261	10,5	53
		Q3H80M4D	Aluminium	0,75	1,00	1447	3,1/1,8	4,9	6,4		2,6		3,5	82,5	80,4	77,1	0,74	0,00261	11,7	53
	C	Q3H80M4DE	Aluminium	1,10	1,50	1447	4,5/2,6	7,3	7,1		3,0		3,8	84,1	83,4	82,1	0,74	0,00306	14,2	53
		Q3HS90S4C	Aluminium	1,10	1,50	1447	4,5/2,6	7,3	7,1		3,0		3,8	84,1	83,4	82,1	0,74	0,00328	14,5	53
		Q3H90L4C	Aluminium	1,10	1,50	1445	4,4/2,53	7,3	7,2		3,1		4,0	84,1	82,7	79,3	0,78	0,00464	18,5	54
		Q3H90L4D	Aluminium	1,50	2,00	1449	6,1/3,15	9,9	8,2		3,7		4,3	85,3	85,0	82,1	0,76	0,00526	20,0	54
	C	Q3H90L4DE	Aluminium	2,20	3,00	1452	9,5/5,5	14,5	8,9		4,2		4,7	86,7	84,4	80,9	0,68	0,00691	25,0	54
		Q3H100L4C	Aluminium	2,20	3,00	1447	8,3/4,8	14,5	8,4		3,4		4,1	86,7	86,5	84,1	0,79	0,00871	26,5	58
		Q3HS100L4C	Aluminium	2,20	3,00	1452	9,5/5,5	14,5	8,9		4,2		4,7	86,7	84,4	80,9	0,68	0,00690	25,0	54
		Q3H100L4D	Aluminium	3,00	4,00	1445	10,7/6,2	20,0	8,6		3,4		3,9	87,7	87,4	85,4	0,82	0,01059	31,0	58
400/690 V		Q3H112M4D	Aluminium	4,00	5,50	1455	8,3/4,8	26,7		9,50		3,70	4,4	88,6	88,8	87,3	0,79	0,01383	36,3	60
	C	Q3H112M4E	Aluminium	5,50	7,50	1443	11,25/6,5	36,5		8,50		3,10	3,8	89,6	89,2	88,3	0,80	0,01527	40,0	60
		Q3H132S4B	Aluminium	5,50	7,50	1468	11,3/6,5	35,8		7,60		2,00	3,6	89,6	89,8	88,3	0,79	0,03560	49,5	63
		Q3HS132S4B	Aluminium	5,50	7,50	1443	11,25/6,5	36,5		8,50		3,10	3,8	89,6	89,2	88,3	0,80	0,01638	43,0	60
		Q3H132M4D	Aluminium	7,50	10,00	1467	15,2/8,8	48,8		8,90		2,60	4,0	90,4	90,7	89,6	0,80	0,04030	58,0	63
	C	Q3H132M4E	Aluminium	11,00	15,00	1470	21,0/12,1	71,8		9,40		2,70	4,3	91,4	91,4	90,5	0,83	0,05940	77,0	63
		Q3H160M4C	Aluminium	11,00	15,00	1475	20,9/12,0	71,2		7,30		2,70	3,1	91,4	91,0	90,1	0,83	0,07542	87,5	65
		Q3HS160M4C	Aluminium	11,00	15,00	1470	21,0/12,1	71,8		8,10		2,70	4,3	91,4	91,4	90,5	0,83	0,05940	77,0	63
		Q3H160L4B	Aluminium	15,00	20,00	1477	30,85/17,8	97,1		7,80		2,80	3,4	92,1	92,0	90,8	0,76	0,09005	101,0	65
	C	Q3H160L4C	Aluminium	18,50	25,00	1474	36,7/21,2	120,0		7,30		2,70	3,1	92,6	93,1	92,5	0,79	0,10511	113,4	65
		Q3H180M4B	Aluminium	18,50	25,00	1475	33,9/19,6	119,4		9,00		2,90	3,5	92,6	92,6	91,5	0,85	0,18660	145,0	65
		Q3HS180M4B	Aluminium	18,50	25,00	1474	36,7/21,2	120,0		7,30		2,70	3,1	92,6	93,1	92,5	0,79	0,11398	117,0	65
	SC	Q3H160L4DE	Aluminium	22,00	30,00	1473	45,0/26,0	142,8		6,70		2,40	3,1	93,0	93,4	92,9	0,77	0,12070	126,5	65
		Q3HS180L4B	Aluminium	22,00	30,00	1473	45,0/26,0	142,8		6,70		2,40	3,1	93,0	93,4	92,9	0,77	0,12070	134,0	65
		Q3H180L4B	Aluminium	22,00	30,00	1483	43,3/25,0	141,5		8,50		2,70	3,6	93,0	92,9	91,9	0,79	0,18660	146,0	68
	C	Q3H180L4C	Aluminium	30,00	40,00	1483	59,0/34,1	193,0		8,80		3,10	4,2	93,6	93,5	92,4	0,79	0,22166	176,0	68
		Q3H200L4D	Aluminium	30,00	40,00	1475	58,2/33,6	194,0		6,80		1,95	2,9	93,6	94,6	94,8	0,85	0,22166	174,0	79
		Q3E225S4B	Aluminium	37,00	50,00	1485	72,3/41,7	238,4		9,16		3,40	4,6	93,9	93,7	92,6	0,78	0,20584	225,0	81
		Q3E225M4C	Aluminium	45,00	60,00	1480	86,9/49,6	290,4		8,30		2,90	4,9	94,2	94,0	93,3	0,85	0,22358	249,5	81
		Q3E250M4B	Aluminium	55,00	75,00	1478	99/57,2	355,3		8,22		3,10	5,0	94,6	95,0	94,4	0,75	0,23795	284,0	81

* According to IEC 60034-2-1
** The sound pressure measurements are taken 1m away from the motor
** Tolerance +3 dBA

IE3 THREE PHASE ALUMINIUM MOTORS

ELECTRICAL CHARACTERISTICS @ 50 Hz

		MOTOR TYPE	HOUSING TYPE	RATED VALUES					STARTING VALUES				Breakdown Torque Ratio	EFFICIENCY *			Cosφ	J	Weight (B3)	Sound Pressure Level
				Power		SPEED	CURRENT	TORQUE	CURRENT IA / IN		TORQUE MA / MN			η %						
				kW	HP	rpm	A (Δ/Y)	Nm	λ	Δ	λ	Δ	Mk/ Mn	4/4	3/4	2/4	4/4	kgm²	kg	dBA**
		6 pole 1000 rpm																		
230/400 V		Q3E63M6B	Aluminium	0,12	0,17	898,00	0,94/0,56	1,28	2,60		2,40		2,60	57,7	53,5	44,2	0,48	0,00022	5,8	58
230/400 V		Q3E71M6A	Aluminium	0,18	0,25	885,00	0,98/0,55	1,94	3,00		1,87		2,06	63,9	63,2	61,1	0,73	0,00095	7,0	62
230/400 V		Q3E71M6B	Aluminium	0,25	0,30	888,00	1,37/0,8	2,69	3,00		1,96		2,17	68,6	67,1	63,6	0,71	0,00127	8,4	62
230/400 V		Q3H80M6A	Aluminium	0,37	0,50	935,00	1,73/0,97	3,80	3,72		1,48		2,00	73,5	75,8	73,0	0,75	0,00150	13,5	64
230/400 V		Q3H80M6B	Aluminium	0,55	0,75	940,00	2,67/1,54	5,62	4,10		1,74		2,32	77,2	77,9	75,4	0,73	0,00188	15,0	65
230/400 V		Q3H90L6C	Aluminium	0,75	1,00	947,00	3,55/2,06	7,58	5,10		2,59		3,09	78,6	78,2	74,7	0,67	0,00460	18,0	66
230/400 V		Q3H90L6D	Aluminium	1,10	1,50	943,00	5,21/2,99	11,2	4,94		2,54		2,95	81,0	80,6	78,3	0,67	0,00528	22,0	66
230/400 V		Q3HS100L6D	Aluminium	1,50	2,00	943,00	7,3/4,2	11,2	4,94		2,53		2,93	82,5	82,7	79,7	0,66	0,00613	24,0	70
230/400 V		Q3H100L6D	Aluminium	1,50	2,00	947,00	7/4,1	15,19	5,57		2,25		2,90	82,5	81,7	78,2	0,72	0,01059	26,0	70
230/400 V		Q3HS112M6D	Aluminium	2,20	3,00	950,00	9,5/5,5	22,1	5,71		2,45		3,11	84,3	84,4	82,4	0,69	0,01242	30,5	71
400/690 V		Q3H132S6A	Aluminium	3,00	4,00	980,00	12/6,9	29,2	5,30		2,18		3,25	86,6	87,5	85,9	0,72	0,03560	52,8	73
400/690 V		Q3H132M6A	Aluminium	4,00	5,50	976,00	9/5,2	39,25		5,68		1,53	2,80	87,7	87,9	86,3	0,72	0,04030	57,6	73
400/690 V		Q3H132M6B	Aluminium	5,50	7,50	971,20	12,6/7,3	54,16		5,44		1,49	2,60	87,2	88,0	87,3	0,75	0,05940	63,5	73
400/690 V		Q3HS160M6C	Aluminium	7,50	10,00	976,40	17/9,8	73,35		6,57		2,67	3,47	89,1	89,2	87,8	0,66	0,08910	79,7	75
400/690 V		Q3H160M6C	Aluminium	7,50	10,00	977,20	16,5/9,5	73,34		4,81		2,04	2,34	91,0	91,7	91,2	0,66	0,07540	101,0	75
400/690 V		Q3H160L6D	Aluminium	11,00	15,00	976,50	24,4/14,1	107,67		5,39		2,63	2,77	90,5	90,9	90,0	0,67	0,09000	115,5	75
400/690 V		Q3H180L6B	Aluminium	15,00	20,00	981,90	32,2/18,5	145,93		5,10		1,61	2,36	91,5	92,0	91,6	0,76	0,18660	158,0	76
400/690 V	C	Q3H180L6C	Aluminium	18,50	25,00	980,40	40,3/23,2	180,12		5,72		2,20	2,79	91,5	92,0	91,4	0,75	0,22262	188,5	76
400/690 V		Q3H200L6C	Aluminium	18,50	25,00	981,10	40,3/23,2	180,15		4,96		1,88	2,51	91,8	92,3	91,9	0,69	0,23286	173,0	79
400/690 V	C	Q3H180L6D	Aluminium	22,00	30,00	982,80	50,5/29,1	213,74		5,31		2,07	2,78	91,5	92,0	91,3	0,64	0,22852	193,5	76
400/690 V		Q3H200L6D	Aluminium	22,00	30,00	983,60	50,5/29,1	213,58		5,62		2,56	3,14	91,1	91,0	89,5	0,61	0,22166	193,5	79
		8 pole 750 rpm																		
230/400 V		Q3E71M8C	Aluminium	0,12	0,17	680,00	1/0,59	1,69	2,40		1,71		2,09	50,7	47,9	40,2	0,57	0,00095	7,2	62
230/400 V		Q3H80M8C	Aluminium	0,18	0,25	708,00	1,2/0,69	2,43	3,03	-	1,50	-	2,18	58,7	60,1	53,0	0,60	0,00261	10,1	64
230/400 V		Q3H80M8D	Aluminium	0,25	0,30	698,00	1,56/0,9	3,51	2,71	-	1,20	-	1,75	64,1	63,4	57,3	0,62	0,00261	11,6	64
230/400 V		Q3H90L8C	Aluminium	0,37	0,50	692,00	2,3/1,31	5,15	2,96		1,62		2,05	68,0	67,0	61,7	0,61	0,00464	15,8	66
230/400 V		Q3H90L8D	Aluminium	0,55	0,75	703,00	3,5/2,0	7,45	3,50		1,93		2,44	69,8	67,7	62,3	0,56	0,00460	18,0	66
230/400 V		Q3H132M8C	Aluminium	2,20	3,00	730,00	10,7/6,16	28,73	4,36		1,72		2,45	81,9	81,6	79,0	0,61	0,03052	52,6	73
230/400 V		Q3H132M8D	Aluminium	3,00	4,00	725,00	13,5/7,79	39,51	15,47		5,55		7,67	83,5	83,8	82,6	0,66	0,04030	57,2	73
400/690 V		Q3H160M8C	Aluminium	4,00	5,50	726,00	10,77/6,2	52,56		3,25		1,56	1,81	84,8	85,4	84,0	0,62	0,07542	86,3	75
400/690 V		Q3H160L8C	Aluminium	5,50	7,50	736,00	19,51/11,3	71,51		4,10		2,76	2,88	86,2	84,7	80,7	0,47	0,10511	100,0	75
400/690 V		Q3H160L8D	Aluminium	7,50	10,00	730,00	23,84/13,8	97,82		4,08		2,47	2,50	87,3	86,6	83,7	0,53	0,10832	107,0	75
400/690 V		Q3H180L8B	Aluminium	11,00	15,00	732,00	28,93/16,7	142,36		4,61		2,00	2,34	88,6	89,2	87,8	0,61	0,12070	185,0	76
400/690 V		Q3H200L8C	Aluminium	11,00	15,00	732,00	28,93/16,7	142,36		4,61		2,00	2,34	88,6	89,2	87,8	0,61	0,19202	185,0	79
400/690 V		Q3H200L8D	Aluminium	15,00	20,00	732,00	38,39/22,2	196,10		3,90		1,42	2,12	89,6	90,0	89,0	0,63	0,22166	195,0	79
400/690 V		Q3E225M8B	Aluminium	18,50	25,00	735,00	44,85/26,2	239,88		4,26		1,77	2,35	90,1	90,8	90,4	0,65	0,20584	235,0	81
400/690 V		Q3E225M8C	Aluminium	22,00	30,00	732,70	55,7	286,70		4,01		1,78	2,35	90,6	90,4	90,1	0,63	0,22358	276,4	81

* According to IEC 60034-2-1
** The sound pressure measurements are taken 1m away from the motor
** Tolerance +3 dBA

IE3 THREE PHASE ALUMINIUM MOTORS

ELECTRICAL CHARACTERISTICS @ 60 Hz

		MOTOR TYPE	HOUSING TYPE	RATED VALUES					STARTING VALUES				Breakdown Torque Ratio	EFFICIENCY *			Cosφ	J	Weight (B3)	Sound Pressure Level
				Power		SPEED	CURRENT	TORQUE	CURRENT IA / IN		TORQUE MA / MN			η %						
				kW	HP	rpm	A (Δ/Y)	Nm	λ	Δ	λ	Δ	Mk/ Mn	4/4	3/4	2/4	4/4	kgm²	kg	dBA**
		2 pole 3600 rpm																		
265/465 V		Q3E63M2K	Aluminium	0.12	0.17	3494	0.6/0.35	0.30	4.68		2.67		4.10	62.0	58.5	51.1	0.72	0.00022	4.3	61
		Q3E63M2A	Aluminium	0.18	0.25	3440	0.74/0.43	0.50	4.77		3.11		3.70	65.6	63.4	59.0	0.81	0.00022	4.4	61
		Q3E63M2B	Aluminium	0.25	0.30	3445	0.97/0.56	0.70	4.96		3.00		3.70	69.5	69.0	66.1	0.87	0.00025	5.0	61
	C	Q3E63M2C	Aluminium	0.37	0.50	3446	1.73/1.00	1.00	6.87		5.00		5.42	73.8	72.4	67.3	0.74	0.00030	6.0	61
		Q3E71M2A	Aluminium	0.37	0.50	3415	1.23/0.71	1.00	5.54		3.22		3.84	73.4	77.1	76.7	0.87	0.00043	6.8	65
		Q3E71M2B	Aluminium	0.55	0.75	3433	2.04/1.18	1.50	5.92		4.22		5.03	76.8	73.1	68.6	0.78	0.00057	7.0	65
	C	Q3E71M2D	Aluminium	0.75	1.00	3496	2.8/1.62	2.00	8.21		5.22		6.22	77.0	81.0	78.3	0.72	0.00036	9.0	65
		Q3H80M2C	Aluminium	0.75	1.00	3512	2.45/1.42	2.00	7.45		3.44		4.89	77.0	76.7	72.2	0.79	0.00140	12.2	67
		Q3H80M2D	Aluminium	1.10	1.50	3510	3.8/2.2	3.00	8.50		4.44		5.69	84.0	83.5	80.5	0.79	0.00170	13.0	67
	C	Q3H80M2DE	Aluminium	1.50	2.00	3525	4.8/2.8	4.10	10.79		5.44		7.27	85.5	84.6	81.7	0.79	0.00224	15.0	67
		Q3H90L2C	Aluminium	1.50	2.00	3500	4.6/2.7	4.10	10.98		4.22		6.74	85.5	85.1	82.6	0.85	0.00249	17.2	69
		Q3HS90S2C	Aluminium	1.50	2.00	3525	4.8/2.8	4.10	10.79		5.44		7.27	85.5	84.6	81.7	0.79	0.00178	15.5	69
		Q3H90L2D	Aluminium	2.20	3.00	3531	6.6/3.8	5.90	8.40		3.11		5.16	86.5	87.0	85.8	0.85	0.00283	18.6	69
	C	Q3H90L2E	Aluminium	3.00	4.00	3526	9.2/5.3	8.10	9.16		3.67		5.82	88.5	88.5	87.9	0.81	0.00318	18.6	69
		Q3H100L2D	Aluminium	3.00	4.00	3533	8.5/4.9	8.10	11.17		4.22		6.08	88.5	87.7	86.2	0.89	0.00536	25.0	73
		Q3HS100L2C	Aluminium	3.00	4.00	3526	9.2/5.3	8.10	9.16		3.67		5.82	88.5	88.5	87.9	0.81	0.00310	25.0	73
465/795 V	C	Q3H100L2DE	Aluminium	4.00	5.50	3536	6.9/4	10.80		13.89		4.89	7.14	88.5	89.3	88.0	0.85	0.00612	28.0	73
		Q3H112M2C	Aluminium	4.00	5.50	3526	6.4/3.7	10.80		12.33		3.78	5.95	88.5	87.0	80.0	0.89	0.00604	32.0	74
		Q3HS112M2C	Aluminium	4.00	5.50	3536	6.7/3.9	10.80		13.89		4.89	7.14	88.5	89.3	88.0	0.85	0.00638	29.0	74
	SC	Q3H100L2E	Aluminium	5.50	7.50	3570	9.2/5.3	14.70		14.77		5.67	7.80	89.5	88.9	87.0	0.84	0.00612	35.0	73
	C	Q3H112M2D	Aluminium	5.50	7.50	3533	8.6/5	14.90		13.55		5.55	8.07	89.5	892	87.6	0.89	0.00741	32.0	74
		Q3H132S2C	Aluminium	5.50	7.50	3529	9/5.2	14.90		9.89		3.44	5.69	89.5	89.7	88.9	0.86	0.02792	50.0	76
		Q3HS132S2C	Aluminium	5.50	7.50	3533	8.6/5	14.90		13.55		5.55	8.07	89.5	89.2	87.6	0.89	0.00772	36.2	76
	C	Q3H112M2DE	Aluminium	7.50	10.00	3515	11.7/6.6	20.40		14.00		5.33	7.80	90.2	90.1	88.8	0.91	0.00921	41.0	74
		Q3H132S2D	Aluminium	7.50	10.00	3530	12.2/7	20.30		10.89		3.89	5.95	90.2	90.8	89.5	0.85	0.03091	55.5	76
		Q3HS132S2D	Aluminium	7.50	10.00	3515	11.7/6.6	20.40		14.00		5.33	7.80	90.2	90.1	88.8	0.91	0.00932	42.5	76
	C	Q3H132M2A	Aluminium	11.00	15.00	3519	18.5/10.6	29.90		10.44		3.89	6.74	91.0	91.2	90.5	0.81	0.03489	61.0	76
		Q3H160M2C	Aluminium	11.00	15.00	3570	17.7/10.2	29.40		9.00		2.67	5.55	91.0	91.5	89.5	0.85	0.04322	82.5	78
		Q3HS160M2D	Aluminium	11.00	15.00	3519	18.5/10.6	29.90		10.44		3.89	6.74	91.0	91.2	90.5	0.81	0.04015	63.0	78
	C	Q3H132M2B	Aluminium	15.00	20.00	3534	24.4/14.1	40.50		11.89		4.22	6.74	91.0	89.8	89.1	0.83	0.03489	64.0	76
		Q3H160M2D	Aluminium	15.00	20.00	3557	23.9/13.8	40.30		10.78		3.11	6.35	91.0	91.2	90.1	0.87	0.04322	88.5	78
		Q3H160L2C	Aluminium	18.50	25.00	3567	32.1/18.5	49.50		12.66		4.44	7.41	91.7	91.3	89.3	0.79	0.04809	94.8	78
	C	Q3H160L2D	Aluminium	22.00	30.00	3562	35.2/20.3	59.00		13.00		4.00	6.88	91.7	92.3	91.2	0.88	0.05540	118.0	78
		Q3H180M2A	Aluminium	22.00	30.00	3570	33.4/19.3	58.80		12.44		3.55	5.55	91.7	91.5	90.1	0.89	0.09460	135.0	79
		Q3HS180M2B	Aluminium	22.00	30.00	3562	35.2/20.3	59.00		13.00		4.00	6.88	91.7	92.3	91.2	0.88	0.05869	108.0	79
	C	Q3H180M2B	Aluminium	30.00	40.00	3572	46.6/26.9	80.20		11.89		3.44	6.74	92.4	82.2	91.7	0.87	0.10277	138.5	79
		Q3H200L2C	Aluminium	30.00	40.00	3572	46.6/26.9	80.20		11.89		3.44	6.74	92.4	92.2	91.7	0.87	0.10277	143.0	82
	C	Q3H180L2D	Aluminium	37.00	50.00	3564	53.5/30.9	99.82		9.64		3.22	5.82	93.0	93.6	93.1	0.93	0.10512	150.0	79
		Q3H200L2D	Aluminium	37.00	50.00	3564	53.5/30.9	99.82		9.64		3.22	5.82	93.0	93.6	93.1	0.93	0.11383	170.0	82
	SC	Q3H180L2DE	Aluminium	45.00	60.00	3570	65.51/37.31	120.77		12.62		3.4	7.55	93.5	93.3	92.0	0.93	0.10277	199.0	79
	C	Q3H200L2DE	Aluminium	45.00	60.00	3570	65.51/37.31	120.77		12.62		3.4	7.55	93.5	93.3	92.0	0.93	0.14770	199.0	82
		Q3E225M2B	Aluminium	45.00	60.00	3580	68.7/40.1	120.86		10.98		4.00	6.88	93.6	94.4	93.5	0.87	0.12158	218.0	84
		Q3E250M2B	Aluminium	55.00	75.00	3577	85.4/49.4	147.85		11.07		4.11	9.26	93.6	93.1	91.8	0.86	0.14216	246.0	84
	SC	***Q3H180L2DE	Aluminium	45.00	60.00															

* According to IEC 60034-2-1
** The sound pressure measurements are taken 1m away from the motor
** Tolerance +3 dBA
*** Please consult with us.

IE3 THREE PHASE ALUMINIUM MOTORS

ELECTRICAL CHARACTERISTICS @ 60 Hz

		MOTOR TYPE	HOUSING TYPE	RATED VALUES					STARTING VALUES				Breakdown Torque Ratio	EFFICIENCY *			Cosφ	J	Weight (B3)	Sound Pressure Level
				Power		SPEED	CURRENT	TORQUE	CURRENT IA / IN		TORQUE MA / MN			η %						
				kW	HP	rpm	A (Δ/Y)	Nm	λ	Δ	λ	Δ	Mk/ Mn	4/4	3/4	2/4	4/4	kgm²	kg	dBA**
		4 pole 1800 rpm																		
265/460 V		Q3E63M4A	Aluminium	0.12	0.17	1710.00	0.71/0.41	0.67	3.53		4.11		3.97	66.00	59.50	52.30	0.60	0.00022	5.00	61
		Q3E63M4B	Aluminium	0.18	0.25	1698.00	0.81/0.47	1.02	4.01		4.67		3.97	69.50	67.70	64.20	0.67	0.00026	4.50	61
	C	Q3E63M4C	Aluminium	0.25	0.30	1718.00	1.32/0.76	1.40	4.10		4.78		4.76	73.40	72.40	66.20	0.56	0.00034	5.90	61
		Q3E71M4B	Aluminium	0.25	0.30	1747.00	1.14/0.66	1.38	5.15		6.00		4.50	73.40	73.80	68.90	0.63	0.00081	7.10	65
		Q3E71M4C	Aluminium	0.37	0.50	1745.00	1.6/0.93	2.04	5.06		5.89		4.50	78.20	76.70	73.40	0.63	0.00095	7.60	65
	C	Q3E71M4E	Aluminium	0.55	0.75	1737.00	2.23/1.29	3.04	5.25		6.11		3.97	81.10	69.80	66.20	0.68	0.00115	9.20	65
		Q3H80M4C	Aluminium	0.55	0.75	1762.00	2.07/1.2	3.00	6.30		7.33		4.76	81.10	79.90	76.00	0.70	0.00261	10.50	67
		Q3H80M4D	Aluminium	0.75	1.00	1758.00	2.82/1.63	4.10	6.11		7.11		4.63	83.50	81.40	78.00	0.80	0.00261	11.70	67
	C	Q3H80M4DE	Aluminium	1.10	1.50	1755.00	4.3/2.5	6.03	6.78		7.89		5.03	86.50	85.80	84.40	0.72	0.00306	14.50	67
		Q3HS90S4C	Aluminium	1.10	1.50	1755.00	4/2.3	6.03	6.78		7.89		5.03	86.50	85.80	84.40	0.72	0.00328	14.50	69
		Q3H90L4C	Aluminium	1.10	1.50	1750.00	3.8/2.2	6.04	6.87		8.00		5.29	86.50	86.10	83.00	0.77	0.00464	18.50	69
		Q3H90L4D	Aluminium	1.50	60.00	1752	5.4/3.1	8.23	7.83		9.11		5.69	86.50	86.20	83.30	0.72	0.00526	20.00	69
	C	Q3H90L4DE	Aluminium	2.20	3.00															
		Q3H100L4C	Aluminium	2.20	3.00	1750	7.9/4.6	12.09	8.02		9.33		5.42	89.50	88.90	85.20	0.82	0.00871	26.00	73
		Q3HS100L4C	Aluminium	2.20	3.00	1752	9.6/5.5	12.07	8.50		9.89		6.22	89.50	88.20	86.20	0.68	0.00690	25.00	73
		Q3H100L4D	Aluminium	3.00	4.00	1765	12.1/6.95	16.34	8.21		9.55		5.16	89.50	86.90	89.10	0.73	0.01059	31.00	73
465/795 V		Q3H112M4D	Aluminium	4.00	5.50	1760	7.4/4.3	21.85		9.07		4.11	5.82	89.50	89.70	88.20	0.78	0.01383	32.00	74
	C	Q3H112M4E	Aluminium	5.50	7.50	1784	9.5/5.5	29.64		8.11		3.44	5.03	91.70	91.30	90.40	0.80	0.01527	40.00	74
		Q3H132S4B	Aluminium	5.50	7.50	1776	10.0/5.8	29.78		7.25		2.22	4.76	91.70	91.50	90.00	0.75	0.03560	53.50	76
		Q3HS132S4B	Aluminium	5.50	7.50	1784	9.5/5.5	29.64		8.11		3.44	5.03	91.70	91.30	90.40	0.80	0.01858	43.00	76
		Q3H132M4D	Aluminium	7.50	10.00	1774	13.0/7.5	40.65		8.50		2.89	5.29	91.70	90.80	90.20	0.80	0.04030	58.00	76
	C	Q3H132M4E	Aluminium	11.00	15.00	1776	18.7/10.8	59.55		8.97		3.00	5.69	92.40	92.40	91.40	0.80	0.05940	69.00	76
		Q3H160M4C	Aluminium	11.00	15.00	1777	19.2/11.0	59.52		6.97		3.00	4.10	92.40	90.90	91.20	0.79	0.07542	87.50	78
		Q3HS160M4C	Aluminium	11.00	15.00	1776	18.7/10.8	59.55		7.73		3.00	5.69	92.40	92.40	91.40	0.80	0.05940	83.00	78
		Q3H160L4B	Aluminium	15.00	20.00	1780	27.0/15.6	81.03		7.45		3.11	4.50	93.00	92.10	91.50	0.76	0.09005	101.00	78
	C	Q3H160L4C	Aluminium	18.50	25.00	1778	32.0/18.4	100.05		6.97		3.00	4.10	93.60	93.10	92.20	0.78	0.10511	113.40	78
		Q3H180M4B	Aluminium	18.50	25.00	1785	29.9/17.3	99.66		8.59		3.22	4.63	93.60	93.60	92.60	0.84	0.18660	145.00	79
		Q3HS180M4B	Aluminium	18.50	25.00	1778	32.0/18.4	100.05		6.97		3.00	4.10	93.60	93.00	92.30	0.78	0.11398	117.00	79
	SC	Q3H160L4DE	Aluminium	22.00	30.00	1776	39.0/22.5	119.11		6.40		2.67	4.10	93.60	94.00	93.50	0.76	0.12070	126.50	78
		Q3HS180L4B	Aluminium	22.00	30.00	1776	39.0/22.5	119.11		6.40		2.67	4.10	93.60	94.00	93.50	0.76	0.12070	134.00	79
		Q3H180L4B	Aluminium	22.00	30.00	1785	37.7/21.8	118.51		8.11		3.00	4.76	93.60	93.40	92.50	0.79	0.18660	146.00	79
	C	Q3H180L4C	Aluminium	30.00	40.00	1783	50.4/29.1	161.78		8.40		3.44	5.55	94.10	93.70	92.80	0.80	0.22166	170.00	79
		Q3H200L4D	Aluminium	30.00	40.00	1778	47.2/27.2	162.24		6.49		2.17	3.87	94.10	93.70	92.80	0.84	0.22166	174.00	82
		Q3E225S4B	Aluminium	37.00	50.00	1786	63.8/37.3	199.20		8.74		3.78	6.08	94.50	94.10	92.50	0.78	0.20584	239.00	84
		Q3E225M4C	Aluminium	45.00	60.00	1788	86.4/50.5	242.00		7.92		3.22	6.48	95.00	94.40	92.90	0.69	0.22358	265.00	84
		Q3E250M4B	Aluminium	55.00	75.00	1777	91.8/53.0	297.61		7.85		3.44	6.61	95.40	95.50	94.80	0.80	0.23795	278.00	84

* According to IEC 60034-2-1
** The sound pressure measurements are taken 1m away from the motor
** Tolerance +3 dBA

IE3 THREE PHASE ALUMINIUM MOTORS

		MOTOR TYPE	HOUSING TYPE	RATED VALUES					STARTING VALUES				Breakdown Torque Ratio	EFFICIENCY *			Cosφ	J	Weight (B3)	Sound Pressure Level
				Power		SPEED	CURRENT	TORQUE	CURRENT IA / IN		TORQUE MA / MN			η %						
				kW	HP	rpm	A (Δ/Y)	Nm	λ	Δ	λ	Δ	Mk/ Mn	4/4	3/4	2/4	4/4	kgm²	kg	dBA**
		6 pole 1200 rpm																		
265/460 V		***Q3E63M6B	Aluminium	0.12	0.17															
		Q3E71M6A	Aluminium	0.18	0.25	1113.00	0.85/0.49	1.56	2.86		2.08		2.72	67.50	66.80	64.50	0.69	0.00095	6.00	65
		Q3E71M6B	Aluminium	0.25	0.30	1110.00	1.23/0.71	2.17	2.86		2.18		2.87	71.40	68.10	65.50	0.66	0.00127	8.40	65
		Q3H80M6A	Aluminium	0.37	0.50	1143.00	1.47/0.85	3.11	3.55		1.64		2.65	75.30	77.70	74.80	0.71	0.00150	12.00	67
		Q3H80M6B	Aluminium	0.55	0.75	1150.00	1.14/0.67	4.60	3.91		1.93		3.07	81.70	80.90	77.80	0.67	0.00188	12.50	68
		Q3H90L6C	Aluminium	0.75	1.00	1157.00	3.3/1.9	6.23	4.87		2.88		4.09	82.50	82.00	77.90	0.62	0.00460	18.00	69
		Q3H90L6D	Aluminium	1.10	1.50	1151.00	1.02/0.59	9.19	4.72		2.82		3.90	81.60	79.70	75.30	0.59	0.00528	19.90	69
		***Q3HS100L6D	Aluminium	1.50	2.00															
		***Q3H100L6D	Aluminium	1.50	2.00															
		***Q3HS112M6D	Aluminium	2.20	3.00															
460/795 V		Q3H132S6A	Aluminium	3.00	4.00	1182.00	10.7/6.2	24.20		5.31		1.69	3.56	89.5	88.40	87.2	0.70	0.03560	57.00	76
		Q3H132M6A	Aluminium	4.00	5.50	1178.00	8.1/4.6	32.65		5.42		1.70	3.70	89.50	88.60	87.20	0.74	0.04030	58.00	76
		Q3H132M6B	Aluminium	5.50	7.50	1180.00	11.3/6.5	44.82		5.19		1.66	3.44	91.00	91.10	89.90	0.69	0.05940	63.50	76
		Q3HS160M6C	Aluminium	7.50	10.00	1179.00	15.0/8.7	61.17		6.27		2.97	4.59	91.00	91.40	90.40	0.69	0.08910	75.00	78
		Q3H160M6C	Aluminium	7.50	10.00	1179.00	14.8/8.6	61.17		4.59		2.27	3.09	91.00	92.30	91.40	0.70	0.07540	100.00	78
		Q3H160L6D	Aluminium	11.00	15.00	1178.00	21.6/12.5	89.79		5.14		2.92	3.66	91.70	91.90	91.20	0.70	0.09000	116.00	78
		Q3H180L6B	Aluminium	15.00	20.00	1183.00	27.7/16.0	121.92		4.87		1.79	3.12	91.70	91.40	89.20	0.73	0.18660	155.00	79
	C	Q3H180L6C	Aluminium	18.50	25.00	1181.00	36.2/20.9	150.62		5.46		2.44	3.69	93.00	92.70	92.10	0.73	0.22271	185.00	79
		Q3H200L6C	Aluminium	18.50	25.00	1181.00	36.2/20.9	150.62		4.73		2.09	3.32	93.00	92.70	92.10	0.73	0.23286	193.60	82
	C	Q3H180L6D	Aluminium	22.00	30.00	1183.00	45.2/26.1	178.82		5.07		2.30	3.68	93.00	92.90	92.40	0.65	0.22873	190.00	79
		Q3H200L6D	Aluminium	22.00	30.00	1183.00	45.2/26.1	178.82		5.36		2.84	4.15	93.00	92.90	92.40	0.65	0.22166	195.00	82
		8 pole 900 rpm																		
265/460 V		Q3E71M8C	Aluminium	0.12	0.17	843.00	0.95/0.55	1.36	2.29		1.89		2.76	59.5	56.20	47.20	0.51	0.00095	7.20	65
		Q3H80M8C	Aluminium	0.18	0.25	865.00	1.11/0.64	2.01	2.50		1.24		1.81	64	65.40	57.70	0.55	0.00261	10.10	67
		Q3H80M8D	Aluminium	0.25	0.30	858.00	1.44/0.83	2.82	2.25		1.00		1.45	68	67.20	60.80	0.56	0.00261	11.60	67
		Q3H90L8C	Aluminium	0.37	0.50	853.00	2.1/1.2	4.17	2.83		1.80		2.71	72.00	71.20	65.70	0.55	0.00464	15.80	69
		Q3H90L8D	Aluminium	0.55	0.75	858.00	3.1/1.9	6.16	3.34		2.14		3.23	74.00	73.70	68.80	0.53	0.00460	18.00	69
		Q3H132M8C	Aluminium	2.20	3.00	882.00	9.4/5.4	23.98	4.16		1.91		3.24	85.50	85.40	83.20	0.58	0.03052	52.50	76
		Q3H132M8D	Aluminium	3.00	4.00	879.00	7.11/4.1	32.82	14.77		6.17		10.14	86.50	86.60	85.40	0.61	0.04030	57.20	76
460/795 V		Q3H80M8C	Aluminium	0.18	5.50	865.00	1.11/0.64	2.01						64	65.40	57.7	0.55	0.07542	10.10	67
		Q3H132M8C	Aluminium	2.20	7.50	882.00	9.4/5.4	23.98	4.16		1.91		3.24	85.50	85.40	83.20	0.58	0.10511	52.50	76
		Q3H132M8D	Aluminium	3.00	10.00	879.00	7.11/4.1	32.82	14.77		6.17		10.14	86.50	86.60	85.40	0.61	0.10832	57.20	76
		Q3H160M8C	Aluminium	4.00	15.00	880.00	9.6/5.5	43.71		3.10		1.73	2.39	86.50	87.00	85.80	0.60	0.12070	86.00	78
		Q3H160L8C	Aluminium	5.50	15.00	887.00	17.6/10.2	59.62		3.91		3.07	3.81	86.50	85.00	81.00	0.45	0.19202	100.00	78
		Q3H160L8D	Aluminium	7.50	20.00	883.00	21.3/12.3	81.67		3.89		2.74	3.31	89.50	88.80	85.80	0.50	0.22166	107.00	78
		Q3H180L8B	Aluminium	11.00	25.00	887.00	25.9/15.0	119.24		4.40		2.22	3.09	89.50	89.80	88.80	0.59	0.20584	169.00	79
		Q3H200L8C	Aluminium	11.00	30.00	887.00	25.9/15.0	119.24		4.40		2.22	3.09	89.50	89.80	88.80	0.59	0.22358	178.00	82
		Q3H200L8D	Aluminium	15.00	20.00	885.00	33.9/19.6	162.97		3.72		1.58	2.80	90.20	90.60	89.60	0.62	0.22166	195.00	82
		Q3E225M8B	Aluminium	18.50	25.00	886.00	39.8/23	200.77		4.07		1.97	3.11	90.20	90.90	90.50	0.66	0.20584	235.00	84

* According to IEC 60034-2-1
** The sound pressure measurements are taken 1m away from the motor
** Tolerance +3 dBA
*** Please consult with us.

IE3 THREE PHASE ALUMINIUM MOTORS

DIMENSION - B3

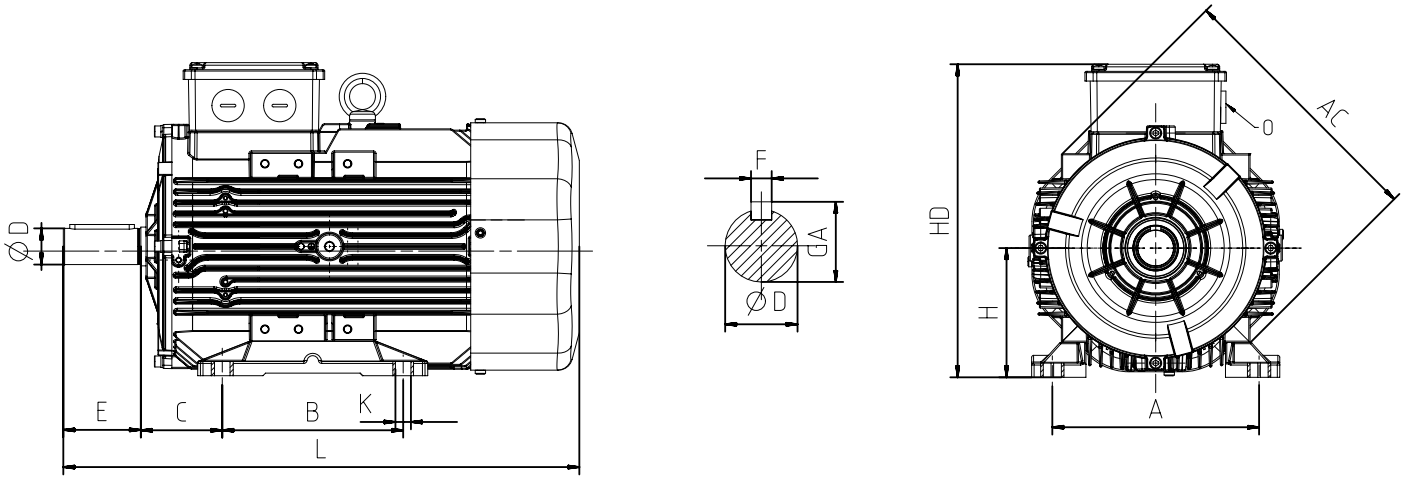

	Power (kW)	Number of Poles	Motor Type	Housing Type	Main Dimensions			Foot Mounted Motors						Shaft				Bearing		Seal	
					AC	L	O	B	A	H	HD	K	C	D	E	GA	F	Drive Side	Non drive Side	Drive Side	Non drive Side
	2 pole																				
	0,12	2	Q3E63M2K	Aluminium	123	220	1xM20	80	100	63	162	7,0	40	11	23	12,5	4	6201-ZZ	6201-ZZ	12*22*7	12*22*7
	0,18	2	Q3E63M2A	Aluminium	123	220	1xM20	80	100	63	162	7,0	40	11	23	12,5	4	6201-ZZ	6201-ZZ	12*22*7	12*22*7
	0,25	2	Q3E63M2B	Aluminium	123	220	1xM20	80	100	63	162	7,0	40	11	23	12,5	4	6201-ZZ	6201-ZZ	12*22*7	12*22*7
C	0,37	2	Q3E63M2C	Aluminium	123	234	1xM20	80	100	63	162	7,0	40	11	23	12,5	4	6201-ZZ	6201-ZZ	12*22*7	12*22*7
	0,37	2	Q3E71M2A	Aluminium	138	253	1xM20	90	112	71	180	7,0	45	14	30	16,0	5	6202-ZZ	6202-ZZ	15*24*5	15*24*5
	0,55	2	Q3E71M2B	Aluminium	138	253	1xM20	90	112	71	180	7,0	45	14	30	16,0	5	6202-ZZ	6202-ZZ	15*24*5	15*24*5
C	0,75	2	Q3E71M2D	Aluminium	138	262	1xM20	90	112	71	180	7,0	45	14	30	16,0	5	6202-ZZ	6202-ZZ	15*24*5	15*24*5
	0,75	2	Q3H80M2C	Aluminium	158	268	1xM20	100	125	80	216	10,0	50	19	40	21,5	6	6204-ZZ	6204-ZZ	20*30*7	20*30*7
	1,10	2	Q3H80M2D	Aluminium	158	268	1xM20	100	125	80	216	10,0	50	19	40	21,5	6	6204-ZZ	6204-ZZ	20*30*7	20*30*7
C	1,50	2	Q3H80M2DE	Aluminium	158	293	1xM20	100	125	80	216	10,0	50	19	40	21,5	6	6204-ZZ	6204-ZZ	20*30*7	20*30*7
	1,50	2	Q3H90L2C	Aluminium	172	344	2xM25	100-125	140	90	236	10,0	56	24	50	27,0	8	6305-ZZ	6205-ZZ	25*40*7	25*40*7
	1,50	2	Q3HS90S2C	Aluminium	158	303	1xM20	100-125	140	90	226	10,0	56	24	50	27,0	8	6305-ZZ	6204-ZZ	25*40*7	20*30*7
	2,20	2	Q3H90L2D	Aluminium	172	344	2xM25	100-125	140	90	236	10,0	56	24	50	27,0	8	6305-ZZ	6205-ZZ	25*40*7	25*40*7
C	3,00	2	Q3H90L2E	Aluminium	172	344	2xM25	100-125	140	90	236	10,0	56	24	50	27,0	8	6305-ZZ	6205-ZZ	25*40*7	25*40*7
	3,00	2	Q3H100L2D	Aluminium	191	400	2xM25	140	160	100	243	12,0	63	28	60	31,0	8	6306-ZZ	6205-ZZ	30*47*7	25*40*7
	3,00	2	Q3HS100L2C	Aluminium	172	349	2xM25	140	160	100	246	12,0	63	28	60	31,0	8	6306-ZZ	6205-ZZ	30*47*7	25*40*7
C	4,00	2	Q3H100L2DE	Aluminium	191	400	2xM25	140	160	100	243	12,0	63	28	60	31,0	8	6306-ZZ	6205-ZZ	30*47*7	25*40*7
	4,00	2	Q3H112M2C	Aluminium	210	396	2xM25	140	190	112	265	12,0	70	28	60	31,0	8	6306-ZZ	6206-ZZ	30*47*7	30*47*7
	4,00	2	Q3HS112M2C	Aluminium	191	399	2xM25	140	190	112	260	12,0	70	28	60	31,0	8	6306-ZZ	6205-ZZ	30*47*7	25*40*7
SC	5,50	2	Q3H100L2E	Aluminium	191	400	2xM25	140	160	100	243	12,0	63	28	60	31,0	8	6306-ZZ	6205-ZZ	30*47*7	25*40*7
C	5,50	2	Q3H112M2D	Aluminium	210	396	2xM25	140	190	112	265	12,0	70	28	60	31,0	8	6306-ZZ	6206-ZZ	30*47*7	30*47*7
	5,50	2	Q3H132S2C	Aluminium	260	481	2xM32	140-178	216	132	328	12,0	89	38	80	41,0	10	6208-ZZ	6208-ZZ	40*62*10	40*62*10
	5,50	2	Q3HS132S2C	Aluminium	210	422	2xM25	140-178	216	132	285	12,0	89	38	80	41,0	10	6208-ZZ	6206-ZZ	40*62*10	30*47*7
C	7,50	2	Q3H112M2DE	Aluminium	210	421	2xM25	140	190	112	265	12,0	70	28	60	31,0	8	6306-ZZ	6206-ZZ	30*47*7	30*47*7

IE3 THREE PHASE ALUMINIUM MOTORS

	Power (kW)	Number of Poles	Motor Type	Housing Type	Main Dimensions			Foot Mounted Motors						Shaft				Bearing		Seal	
					AC	L	O	B	A	H	HD	K	C	D	E	GA	F	Drive Side	Non drive Side	Drive Side	Non drive Side
	7,50	2	Q3H132S2D	Aluminium	260	481	2xM32	140-178	216	132	328	12,0	89	38	80	41,0	10	6208-ZZ	6208-ZZ	40*62*10	40*62*10
	7,50	2	Q3HS132S2D	Aluminium	210	447	2xM25	140-178	216	132	285	12,0	89	38	80	41,0	10	6208-ZZ	6206-ZZ	40*62*10	30*47*7
C	11,00	2	Q3H132M2A	Aluminium	260	481	2xM32	140-178	216	132	328	12,0	89	38	80	41,0	10	6208-ZZ	6208-ZZ	40*62*10	40*62*10
	11,00	2	Q3H160M2C	Aluminium	305	591	2xM32	210-254	254	160	378	14,5	108	42	110	45,0	12	6309-ZZ	6209-ZZ	45*72*10	45*72*10
	11,00	2	Q3HS160M2D	Aluminium	260	520	2xM32	210-254	254	160	356	14,5	108	42	110	45,0	12	6309-ZZ	6208-ZZ	45*72*10	40*62*10
C	15,00	2	Q3H132M2B	Aluminium	260	539	2xM32	140-178	216	132	328	12,0	89	38	80	41,0	10	6208-ZZ	6208-ZZ	40*62*10	40*62*10
	15,00	2	Q3H160M2D	Aluminium	305	591	2xM32	210-254	254	160	378	14,5	108	42	110	45,0	12	6309-ZZ	6209-ZZ	45*72*10	45*72*10
	18,50	2	Q3H160L2C	Aluminium	305	591	2xM32	210-254	254	160	378	14,5	108	42	110	45,0	12	6309-ZZ	6209-ZZ	45*72*10	45*72*10
C	22,00	2	Q3H160L2D	Aluminium	305	591	2xM32	210-254	254	160	378	14,5	108	42	110	45,0	12	6309-ZZ	6209-ZZ	45*72*10	45*72*10
	22,00	2	Q3H180M2A	Aluminium	348	696	2xM40	241-279	279	180	437	14,5	121	48	110	51,5	14	6310-ZZ	6310-ZZ	50*80*10	50*80*10
	22,00	2	Q3HS180M2B	Aluminium	305	600	2xM32	241-279	279	180	398	14,5	121	48	110	51,5	14	6310-ZZ	6209-ZZ	50*80*10	45*72*10
C	30,00	2	Q3H180M2B	Aluminium	348	696	2xM40	241-279	279	180	437	14,5	121	48	110	51,5	14	6310-ZZ	6310-ZZ	50*80*10	50*80*10
	30,00	2	Q3H200L2C	Aluminium	348	706	2xM50	267-305	318	200	457	18,5	133	55	110	59,0	16	6312-ZZ	6310-ZZ	60*90*10	50*80*10
C	37,00	2	Q3H180L2D	Aluminium	348	696	2xM40	241-279	279	180	437	14,5	121	48	110	51,5	14	6310-ZZ	6310-ZZ	50*80*10	50*80*10
	37,00	2	Q3H200L2D	Aluminium	348	706	2xM50	267-305	318	200	457	18,5	133	55	110	59,0	16	6312-ZZ	6310-ZZ	60*90*10	50*80*10
SC	45,00	2	Q3H180L2DE	Aluminium	348	750	2xM40	241-279	279	180	437	14,5	121	48	110	51,5	14	6310-ZZ	6310-ZZ	50*80*10	50*80*10
C	45,00	2	Q3H200L2DE	Aluminium	348	756	2xM50	267-305	318	200	457	18,5	133	55	110	59,0	16	6312-ZZ	6310-ZZ	60*90*10	50*80*10
	45,00	2	Q3E225M2B	Aluminium	456	735	2xM50	356	286-311	225	485	18,5	149	55	110	59,0	16	6313-ZZ	6313-ZZ	65*100*13	65*100*13
	55,00	2	Q3E250M2B	Aluminium	456	787	2xM50	311-349	406	250	530	24,0	168	60	140	64,0	18	6315-ZZ	6313-ZZ	75*112*12	65*100*13
	4 pole																				
	0,12	4	Q3E63M4A	Aluminium	123	220	1xM20	80	100	63	162	7,0	40	11	23	12,5	4	6201-ZZ	6201-ZZ	12*22*7	12*22*7
	0,18	4	Q3E63M4B	Aluminium	123	220	1xM20	80	100	63	162	7,0	40	11	23	12,5	4	6201-ZZ	6201-ZZ	12*22*7	12*22*7
C	0,25	4	Q3E63M4C	Aluminium	123	234	1xM20	80	100	63	162	7,0	40	11	23	12,5	4	6201-ZZ	6201-ZZ	12*22*7	12*22*7
	0,25	4	Q3E71M4B	Aluminium	138	253	1xM20	90	112	71	180	7,0	45	14	30	16,0	5	6202-ZZ	6202-ZZ	15*24*5	15*24*5
	0,37	4	Q3E71M4C	Aluminium	138	253	1xM20	90	112	71	180	7,0	45	14	30	16,0	5	6202-ZZ	6202-ZZ	15*24*5	15*24*5
C	0,55	4	Q3E71M4E	Aluminium	138	262	1xM20	90	112	71	180	7,0	45	14	30	16,0	5	6202-ZZ	6202-ZZ	15*24*5	15*24*5
	0,55	4	Q3H80M4C	Aluminium	158	268	1xM20	100	125	80	216	10,0	50	19	40	21,5	6	6204-ZZ	6204-ZZ	20*30*7	20*30*7
	0,75	4	Q3H80M4D	Aluminium	158	268	1xM20	100	125	80	216	10,0	50	19	40	21,5	6	6204-ZZ	6204-ZZ	20*30*7	20*30*7
C	1,10	4	Q3H80M4DE	Aluminium	158	293	1xM20	100	125	80	216	10,0	50	19	40	21,5	6	6204-ZZ	6204-ZZ	20*30*7	20*30*7
	1,10	4	Q3HS90S4C	Aluminium	158	303	1xM20	100-125	140	90	226	10,0	56	24	50	27,0	8	6305-ZZ	6204-ZZ	25*40*7	20*30*7
	1,10	4	Q3H90L4C	Aluminium	172	344	2xM25	100-125	140	90	236	10,0	56	24	50	27,0	8	6305-ZZ	6205-ZZ	25*40*7	25*40*7
	1,50	4	Q3H90L4D	Aluminium	172	379	2xM25	100-125	140	90	236	10,0	56	24	50	27,0	8	6305-ZZ	6205-ZZ	25*40*7	25*40*7
C	2,20	4	Q3H90L4DE	Aluminium	172	379	2xM25	100-125	140	90	236	10,0	56	24	50	27,0	8	6305-ZZ	6205-ZZ	25*40*7	25*40*7
	2,20	4	Q3H100L4C	Aluminium	191	400	2xM25	140	160	100	243	12,0	63	28	60	31,0	8	6306-ZZ	6205-ZZ	30*47*7	25*40*7
	2,20	4	Q3HS100L4C	Aluminium	172	384	2xM25	140	160	100	246	12,0	63	28	60	31,0	8	6306-ZZ	6205-ZZ	30*47*7	25*40*7
	3,00	4	Q3H100L4D	Aluminium	191	400	2xM25	140	160	100	243	12,0	63	28	60	31,0	8	6306-ZZ	6205-ZZ	30*47*7	25*40*7

IE3 THREE PHASE ALUMINIUM MOTORS

	Power [kW]	Number of Poles	Motor Type	Housing Type	Main Dimensions			Foot Mounted Motors						Shaft				Bearing		Seal	
					AC	L	O	B	A	H	HD	K	C	D	E	GA	F	Drive Side	Non drive Side	Drive Side	Non drive Side
	4,00	4	Q3H112M4D	Aluminium	210	396	2xM25	140	190	112	265	12,0	70	28	60	31,0	8	6306-ZZ	6206-ZZ	30*47*7	30*47*7
C	5,50	4	Q3H112M4E	Aluminium	210	421	2xM25	140	190	112	265	12,0	70	28	60	31,0	8	6306-ZZ	6206-ZZ	30*47*7	30*47*7
	5,50	4	Q3H132S4B	Aluminium	260	481	2xM32	140-178	216	132	328	12,0	89	38	80	41,0	10	6208-ZZ	6208-ZZ	40*62*10	40*62*10
	5,50	4	Q3HS132S4B	Aluminium	210	447	2xM25	140-178	216	132	285	12,0	89	38	80	41,0	10	6208-ZZ	6206-ZZ	40*62*10	30*47*7
	7,50	4	Q3H132M4D	Aluminium	260	481	2xM32	140-178	216	132	328	12,0	89	38	80	41,0	10	6208-ZZ	6208-ZZ	40*62*10	40*62*10
C	11,00	4	Q3H132M4E	Aluminium	260	539	2xM32	140-178	216	132	328	12,0	89	38	80	41,0	10	6208-ZZ	6208-ZZ	40*62*10	40*62*10
	11,00	4	Q3H160M4C	Aluminium	305	591	2xM32	210-254	254	160	378	14,5	108	42	110	45,0	12	6309-ZZ	6209-ZZ	45*72*10	45*72*10
	11,00	4	Q3HS160M4C	Aluminium	260	578	2xM32	210-254	254	160	356	14,5	108	42	110	45,0	12	6309-ZZ	6208-ZZ	45*72*10	40*62*10
	15,00	4	Q3H160L4B	Aluminium	305	591	2xM32	210-254	254	160	378	14,5	108	42	110	45,0	12	6309-ZZ	6209-ZZ	45*72*10	45*72*10
C	18,50	4	Q3H160L4C	Aluminium	305	591	2xM32	210-254	254	160	378	14,5	108	42	110	45,0	12	6309-ZZ	6209-ZZ	45*72*10	45*72*10
	18,50	4	Q3H180M4B	Aluminium	348	696	2xM40	241-279	279	180	437	14,5	121	48	110	51,5	14	6310-ZZ	6310-ZZ	50*80*10	50*80*10
	18,50	4	Q3HS180M4B	Aluminium	305	600	2xM32	241-279	279	180	398	14,5	121	48	110	51,5	14	6310-ZZ	6209-ZZ	50*80*10	45*72*10
SC	22,00	4	Q3H160L4DE	Aluminium	305	619	2xM32	210-254	254	160	378	14,5	108	42	110	45,0	12	6309-ZZ	6209-ZZ	45*72*10	45*72*10
	22,00	4	Q3HS180L4B	Aluminium	305	631	2xM32	241-279	279	180	398	14,5	121	48	110	51,5	14	6310-ZZ	6209-ZZ	50*80*10	45*72*10
	22,00	4	Q3H180L4B	Aluminium	348	696	2xM40	241-279	279	180	437	14,5	121	48	110	51,5	14	6310-ZZ	6310-ZZ	50*80*10	50*80*10
C	30,00	4	Q3H180L4C	Aluminium	348	696	2xM40	241-279	279	180	437	14,5	121	48	110	51,5	14	6310-ZZ	6310-ZZ	50*80*10	50*80*10
	30,00	4	Q3H200L4D	Aluminium	348	706	2xM50	267-305	318	200	457	18,5	133	55	110	59,0	16	6312-ZZ	6310-ZZ	60*90*10	50*80*10
	37,00	4	Q3E225S4B	Aluminium	456	765	2xM50	356	286-311	225	485	18,5	149	60	140	64,0	18	6313-ZZ	6313-ZZ	65*100*13	65*100*13
	45,00	4	Q3E225M4C	Aluminium	456	765	2xM50	356	286-311	225	485	18,5	149	60	140	64,0	18	6313-ZZ	6313-ZZ	65*100*13	65*100*13
	55,00	4	Q3E250M4B	Aluminium	456	787	2xM50	311-349	406	250	530	24,0	168	65	140	69,0	18	6315-ZZ	6313-ZZ	75*112*12	65*100*13
	6 pole																				
	0,12	6	Q3E63M6B	Aluminium	123	234	1xM20	80	100	63	162	7,0	40	11	23	12,5	4	6201-ZZ	6201-ZZ	12*22*7	12*22*7
	0,18	6	Q3E71M6A	Aluminium	138	253	1xM20	90	112	71	180	7,0	45	14	30	16,0	5	6202-ZZ	6202-ZZ	15*24*5	15*24*5
	0,25	6	Q3E71M6B	Aluminium	138	262	1xM20	90	112	71	180	7,0	45	14	30	16,0	5	6202-ZZ	6202-ZZ	15*24*5	15*24*5
	0,37	6	Q3H80M6A	Aluminium	158	268	1xM20	100	125	80	216	10,0	50	19	40	21,5	6	6204-ZZ	6204-ZZ	20*30*7	20*30*7
	0,55	6	Q3H80M6B	Aluminium	158	268	1xM20	100	125	80	216	10,0	50	19	40	21,5	6	6204-ZZ	6204-ZZ	20*30*7	20*30*7
	0,75	6	Q3H90L6C	Aluminium	172	344	2xM25	100-125	140	90	236	10,0	56	24	50	27,0	8	6305-ZZ	6205-ZZ	25*40*7	25*40*7
	1,10	6	Q3H90L6D	Aluminium	172	344	2xM25	100-125	140	90	236	10,0	56	24	50	27,0	8	6305-ZZ	6205-ZZ	25*40*7	25*40*7
	1,50	6	Q3HS100L6D	Aluminium	172	384	2xM25	140	160	100	246	12,0	63	28	60	31,0	8	6306-ZZ	6205-ZZ	30*47*7	25*40*7
	1,50	6	Q3H100L6D	Aluminium	191	400	2xM25	140	160	100	243	12,0	63	28	60	31,0	8	6306-ZZ	6205-ZZ	30*47*7	25*40*7
	2,20	6	Q3HS112M6D	Aluminium	191	399	2xM25	140	190	112	260	12,0	70	28	60	31,0	8	6306-ZZ	6205-ZZ	30*47*7	25*40*7
	3,00	6	Q3H132S6A	Aluminium	260	481	2xM32	140-178	216	132	328	12,0	89	38	80	41,0	10	6208-ZZ	6208-ZZ	40*62*10	40*62*10
	4,00	6	Q3H132M6A	Aluminium	260	481	2xM32	140-178	216	132	328	12,0	89	38	80	41,0	10	6208-ZZ	6208-ZZ	40*62*10	40*62*10
	5,50	6	Q3H132M6B	Aluminium	260	481	2xM32	140-178	216	132	328	12,0	89	38	80	41,0	10	6208-ZZ	6208-ZZ	40*62*10	40*62*10

IE3 THREE PHASE ALUMINIUM MOTORS

	Power (kW)	Number of Poles	Motor Type	Housing Type	Main Dimensions			Foot Mounted Motors						Shaft				Bearing		Seal	
					AC	L	O	B	A	H	HD	K	C	D	E	GA	F	Drive Side	Non drive Side	Drive Side	Non drive Side
	7,50	6	Q3HS160M6C	Aluminium	260	520	2xM32	210-254	254	160	356	14,5	108	42	110	45,0	12	6309-ZZ	6208-ZZ	45*72*10	40*62*10
	7,50	6	Q3H160M6C	Aluminium	305	591	2xM32	210-254	254	160	378	14,5	108	42	110	45,0	12	6309-ZZ	6209-ZZ	45*72*10	45*72*10
	11,00	6	Q3H160L6D	Aluminium	305	619	2xM32	210-254	254	160	378	14,5	108	42	110	45,0	12	6309-ZZ	6209-ZZ	45*72*10	45*72*10
	15,00	6	Q3H180L6B	Aluminium	348	696	2xM40	241-279	279	180	437	14,5	121	48	110	51,5	14	6310-ZZ	6310-ZZ	50*80*10	50*80*10
C	18,50	6	Q3H180L6C	Aluminium	348	696	2xM40	241-279	279	180	437	14,5	121	48	110	51,5	14	6310-ZZ	6310-ZZ	50*80*10	50*80*10
	18,50	6	Q3H200L6C	Aluminium	348	706	2xM50	267-305	318	200	457	18,5	133	55	110	59,0	16	6312-ZZ	6310-ZZ	60*90*10	50*80*10
C	22,00	6	Q3H180L6D	Aluminium	348	750	2xM40	241-279	279	180	437	14,5	121	48	110	51,5	14	6310-ZZ	6310-ZZ	50*80*10	50*80*10
	22,00	6	Q3H200L6D	Aluminium	348	756	2xM50	267-305	318	200	457	18,5	133	55	110	59,0	16	6312-ZZ	6310-ZZ	60*90*10	50*80*10
	8 pole																				
	0,12	8	Q3E71M8C	Aluminium	138	253	1xM20	90	112	71	180	7,0	45	14	30	16,0	5	6202-ZZ	6202-ZZ	15*24*5	15*24*5
	0,18	8	Q3H80M8C	Aluminium	158	268	1xM20	100	125	80	216	10,0	50	19	40	21,5	6	6204-ZZ	6204-ZZ	20*30*7	20*30*7
	0,25	8	Q3H80M8D	Aluminium	158	268	1xM20	100	125	80	216	10,0	50	19	40	21,5	6	6204-ZZ	6204-ZZ	20*30*7	20*30*7
	0,37	8	Q3H90L8C	Aluminium	172	344	2xM25	100-125	140	90	236	10,0	56	24	50	27,0	8	6305-ZZ	6205-ZZ	25*40*7	25*40*7
	0,55	8	Q3H90L8D	Aluminium	172	344	2xM25	100-125	140	90	236	10,0	56	24	50	27,0	8	6305-ZZ	6205-ZZ	25*40*7	25*40*7
	2,20	8	Q3H132M8C	Aluminium	260	481	2xM32	140-178	216	132	328	12,0	89	38	80	41,0	10	6208-ZZ	6208-ZZ	40*62*10	40*62*10
	3,00	8	Q3H132M8D	Aluminium	260	481	2xM32	140-178	216	132	328	12,0	89	38	80	41,0	10	6208-ZZ	6208-ZZ	40*62*10	40*62*10
	4,00	8	Q3H160M8C	Aluminium	305	591	2xM32	210-254	254	160	378	14,5	108	42	110	45,0	12	6309-ZZ	6209-ZZ	45*72*10	45*72*10
	5,50	8	Q3H160L8C	Aluminium	305	591	2xM32	210-254	254	160	378	14,5	108	42	110	45,0	12	6309-ZZ	6209-ZZ	45*72*10	45*72*10
	7,50	8	Q3H160L8D	Aluminium	305	591	2xM32	210-254	254	160	378	14,5	108	42	110	45,0	12	6309-ZZ	6209-ZZ	45*72*10	45*72*10
	11,00	8	Q3H180L8B	Aluminium	348	696	2xM40	241-279	279	180	437	14,5	121	48	110	51,5	14	6310-ZZ	6310-ZZ	50*80*10	50*80*10
	11,00	8	Q3H200L8C	Aluminium	348	706	2xM50	267-305	318	200	457	18,5	133	55	110	59,0	16	6312-ZZ	6310-ZZ	60*90*10	50*80*10
	15,00	8	Q3H200L8D	Aluminium	348	756	2xM50	267-305	318	200	457	18,5	133	55	110	59,0	16	6312-ZZ	6310-ZZ	60*90*10	50*80*10
	18,50	8	Q3E225M8B	Aluminium	456	765	2xM50	356	286-311	225	485	18,5	149	60	140	64,0	18	6313-ZZ	6313-ZZ	65*100*13	65*100*13
	22,00	8	Q3E225M8C	Aluminium	456	765	2xM50	356	286-311	225	485	18,5	149	60	140	64,0	18	6313-ZZ	6313-ZZ	65*100*13	65*100*13

IE3 THREE PHASE ALUMINIUM MOTORS

DIMENSION - B5, B35

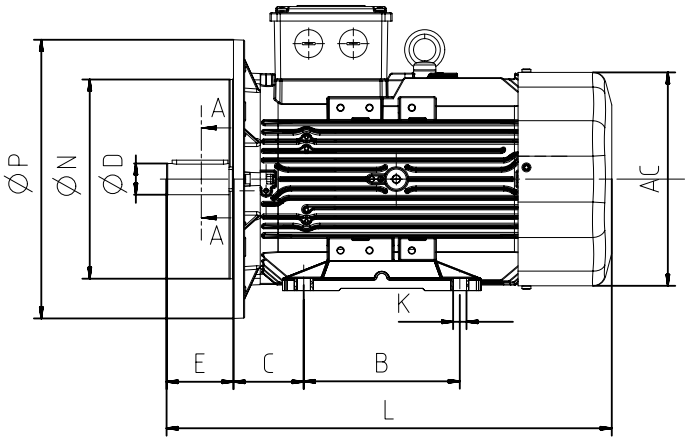

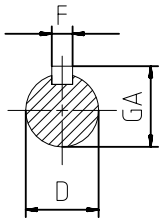

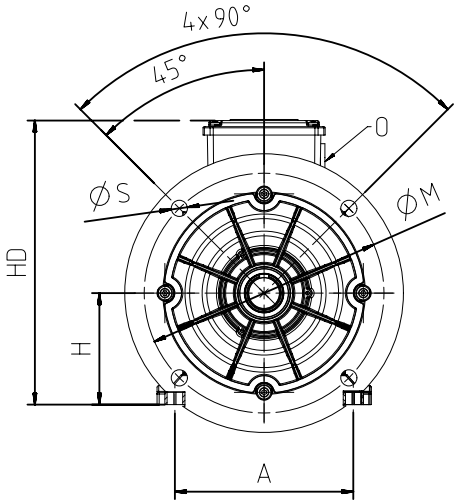

	Power [kW]	Number of Poles	Motor Type	Housing Type	Main Dimensions			Foot Mounted Motors						Shaft				Bearing		Seal		Flange [FA B5, B35]				
					AC	L	O	B	A	H	HD	K	C	D	E	GA	F	Drive Side	Non drive Side	Drive Side	Non drive Side	P	N	M	R	S
2 pole																										
	0,12	2	Q3E63M2K	Aluminium	123	220	1xM20	80	100	63	162	7,0	40	11	23	12,5	4	6201-ZZ	6201-ZZ	12*22*7	12*22*7	140	95	115	0	10,0
	0,18	2	Q3E63M2A	Aluminium	123	220	1xM20	80	100	63	162	7,0	40	11	23	12,5	4	6201-ZZ	6201-ZZ	12*22*7	12*22*7	140	95	115	0	10,0
	0,25	2	Q3E63M2B	Aluminium	123	220	1xM20	80	100	63	162	7,0	40	11	23	12,5	4	6201-ZZ	6201-ZZ	12*22*7	12*22*7	140	95	115	0	10,0
C	0,37	2	Q3E63M2C	Aluminium	123	234	1xM20	80	100	63	162	7,0	40	11	23	12,5	4	6201-ZZ	6201-ZZ	12*22*7	12*22*7	140	95	115	0	10,0
	0,37	2	Q3E71M2A	Aluminium	138	253	1xM20	90	112	71	180	7,0	45	14	30	16,0	5	6202-ZZ	6202-ZZ	15*24*5	15*24*5	160	110	130	0	10,0
	0,55	2	Q3E71M2B	Aluminium	138	253	1xM20	90	112	71	180	7,0	45	14	30	16,0	5	6202-ZZ	6202-ZZ	15*24*5	15*24*5	160	110	130	0	10,0
C	0,75	2	Q3E71M2D	Aluminium	138	262	1xM20	90	112	71	180	7,0	45	14	30	16,0	5	6202-ZZ	6202-ZZ	15*24*5	15*24*5	160	110	130	0	10,0
	0,75	2	Q3H80M2C	Aluminium	158	268	1xM20	100	125	80	216	10,0	50	19	40	21,5	6	6204-ZZ	6204-ZZ	20*30*7	20*30*7	200	130	165	0	12,0
	1,10	2	Q3H80M2D	Aluminium	158	268	1xM20	100	125	80	216	10,0	50	19	40	21,5	6	6204-ZZ	6204-ZZ	20*30*7	20*30*7	200	130	165	0	12,0
C	1,50	2	Q3H80M2DE	Aluminium	158	293	1xM20	100	125	80	216	10,0	50	19	40	21,5	6	6204-ZZ	6204-ZZ	20*30*7	20*30*7	200	130	165	0	12,0
	1,50	2	Q3H90L2C	Aluminium	172	344	2xM25	100-125	140	90	236	10,0	56	24	50	27,0	8	6305-ZZ	6205-ZZ	25*40*7	25*40*7	200	130	165	0	12,0
	1,50	2	Q3HS90S2C	Aluminium	158	303	1xM20	100-125	140	90	226	10,0	56	24	50	27,0	8	6305-ZZ	6204-ZZ	25*40*7	20*30*7	200	130	165	0	12,0
	2,20	2	Q3H90L2D	Aluminium	172	344	2xM25	100-125	140	90	236	10,0	56	24	50	27,0	8	6305-ZZ	6205-ZZ	25*40*7	25*40*7	200	130	165	0	12,0
C	3,00	2	Q3H90L2E	Aluminium	172	344	2xM25	100-125	140	90	236	10,0	56	24	50	27,0	8	6305-ZZ	6205-ZZ	25*40*7	25*40*7	200	130	165	0	12,0
	3,00	2	Q3H100L2D	Aluminium	191	400	2xM25	140	160	100	243	12,0	63	28	60	31,0	8	6306-ZZ	6205-ZZ	30*47*7	25*40*7	250	180	215	0	14,5
	3,00	2	Q3HS100L2C	Aluminium	172	349	2xM25	140	160	100	246	12,0	63	28	60	31,0	8	6306-ZZ	6205-ZZ	30*47*7	25*40*7	250	180	215	0	14,5
C	4,00	2	Q3H100L2DE	Aluminium	191	400	2xM25	140	160	100	243	12,0	63	28	60	31,0	8	6306-ZZ	6205-ZZ	30*47*7	25*40*7	250	180	215	0	14,5
	4,00	2	Q3H112M2C	Aluminium	210	396	2xM25	140	190	112	265	12,0	70	28	60	31,0	8	6306-ZZ	6206-ZZ	30*47*7	30*47*7	250	180	215	0	14,5
	4,00	2	Q3HS112M2C	Aluminium	191	399	2xM25	140	190	112	260	12,0	70	28	60	31,0	8	6306-ZZ	6205-ZZ	30*47*7	25*40*7	250	180	215	0	14,5
SC	5,50	2	Q3H100L2E	Aluminium	191	400	2xM25	140	160	100	243	12,0	63	28	60	31,0	8	6306-ZZ	6205-ZZ	30*47*7	25*40*7	250	180	215	0	14,5
C	5,50	2	Q3H112M2D	Aluminium	210	396	2xM25	140	190	112	265	12,0	70	28	60	31,0	8	6306-ZZ	6206-ZZ	30*47*7	30*47*7	250	180	215	0	14,5
	5,50	2	Q3H132S2C	Aluminium	260	481	2xM32	140-178	216	132	328	12,0	89	38	80	41,0	10	6208-ZZ	6208-ZZ	40*62*10	40*62*10	300	230	265	0	14,5

IE3 THREE PHASE ALUMINIUM MOTORS

	Power [kW]	Number of Poles	Motor Type	Housing Type	Main Dimensions			Foot Mounted Motors						Shaft				Bearing		Seal		Flange [FA B5, B35]				
					AC	L	O	B	A	H	HD	K	C	D	E	GA	F	Drive Side	Non drive Side	Drive Side	Non drive Side	P	N	M	R	S
	5,50	2	Q3HS132S2C	Aluminium	210	422	2xM25	140-178	216	132	285	12,0	89	38	80	41,0	10	6208-ZZ	6206-ZZ	40*62*10	30*47*7	300	230	265	0	14,5
C	7,50	2	Q3H112M2DE	Aluminium	210	421	2xM25	140	190	112	265	12,0	70	28	60	31,0	8	6306-ZZ	6206-ZZ	30*47*7	30*47*7	250	180	215	0	14,5
	7,50	2	Q3H132S2D	Aluminium	260	481	2xM32	140-178	216	132	328	12,0	89	38	80	41,0	10	6208-ZZ	6208-ZZ	40*62*10	40*62*10	300	230	265	0	14,5
	7,50	2	Q3HS132S2D	Aluminium	210	447	2xM25	140-178	216	132	285	12,0	89	38	80	41,0	10	6208-ZZ	6206-ZZ	40*62*10	30*47*7	300	230	265	0	14,5
C	11,00	2	Q3H132M2A	Aluminium	260	481	2xM32	140-178	216	132	328	12,0	89	38	80	41,0	10	6208-ZZ	6208-ZZ	40*62*10	40*62*10	300	230	265	0	14,5
	11,00	2	Q3H160M2C	Aluminium	305	591	2xM32	210-254	254	160	378	14,5	108	42	110	45,0	12	6309-ZZ	6209-ZZ	45*72*10	45*72*10	350	250	300	0	18,5
	11,00	2	Q3HS160M2D	Aluminium	260	520	2xM32	210-254	254	160	356	14,5	108	42	110	45,0	12	6309-ZZ	6208-ZZ	45*72*10	40*62*10	350	250	300	0	18,5
C	15,00	2	Q3H132M2B	Aluminium	260	539	2xM32	140-178	216	132	328	12,0	89	38	80	41,0	10	6208-ZZ	6208-ZZ	40*62*10	40*62*10	300	230	265	0	14,5
	15,00	2	Q3H160M2D	Aluminium	305	591	2xM32	210-254	254	160	378	14,5	108	42	110	45,0	12	6309-ZZ	6209-ZZ	45*72*10	45*72*10	350	250	300	0	18,5
	18,50	2	Q3H160L2C	Aluminium	305	591	2xM32	210-254	254	160	378	14,5	108	42	110	45,0	12	6309-ZZ	6209-ZZ	45*72*10	45*72*10	350	250	300	0	18,5
C	22,00	2	Q3H160L2D	Aluminium	305	591	2xM32	210-254	254	160	378	14,5	108	42	110	45,0	12	6309-ZZ	6209-ZZ	45*72*10	45*72*10	350	250	300	0	18,5
	22,00	2	Q3H180M2A	Aluminium	348	696	2xM40	241-279	279	180	437	14,5	121	48	110	51,5	14	6310-ZZ	6310-ZZ	50*80*10	50*80*10	350	250	300	0	18,5
	22,00	2	Q3HS180M2B	Aluminium	305	600	2xM32	241-279	279	180	398	14,5	121	48	110	51,5	14	6310-ZZ	6209-ZZ	50*80*10	45*72*10	350	250	300	0	18,5
C	30,00	2	Q3H180M2B	Aluminium	348	696	2xM40	241-279	279	180	437	14,5	121	48	110	51,5	14	6310-ZZ	6310-ZZ	50*80*10	50*80*10	350	250	300	0	18,5
	30,00	2	Q3H200L2C	Aluminium	348	706	2xM50	267-305	318	200	457	18,5	133	55	110	59,0	16	6312-ZZ	6310-ZZ	60*90*10	50*80*10	400	300	350	0	18,5
C	37,00	2	Q3H180L2D	Aluminium	348	696	2xM40	241-279	279	180	437	14,5	121	48	110	51,5	14	6310-ZZ	6310-ZZ	50*80*10	50*80*10	350	250	300	0	18,5
	37,00	2	Q3H200L2D	Aluminium	348	706	2xM50	267-305	318	200	457	18,5	133	55	110	59,0	16	6312-ZZ	6310-ZZ	60*90*10	50*80*10	400	300	350	0	18,5
SC	45,00	2	Q3H180L2DE	Aluminium	348	750	2xM40	241-279	279	180	437	14,5	121	48	110	51,5	14	6310-ZZ	6310-ZZ	50*80*10	50*80*10	350	250	300	0	18,5
C	45,00	2	Q3H200L2DE	Aluminium	348	756	2xM50	267-305	318	200	457	18,5	133	55	110	59,0	16	6312-ZZ	6310-ZZ	60*90*10	50*80*10	400	300	350	0	18,5
	45,00	2	Q3E225M2B	Aluminium	456	735	2xM50	356	286-311	225	485	18,5	149	55	110	59,0	16	6313-ZZ	6313-ZZ	65*100*13	65*100*13	450	350	400	0	18,5
	55,00	2	Q3E250M2B	Aluminium	456	787	2xM50	311-349	406	250	530	24,0	168	60	140	64,0	18	6315-ZZ	6313-ZZ	75*112*12	65*100*13	550	450	500	0	18,5
4 pole																										
	0,12	4	Q3E63M4A	Aluminium	123	220	1xM20	80	100	63	162	7,0	40	11	23	12,5	4	6201-ZZ	6201-ZZ	12*22*7	12*22*7	140	95	115	0	10,0
	0,18	4	Q3E63M4B	Aluminium	123	220	1xM20	80	100	63	162	7,0	40	11	23	12,5	4	6201-ZZ	6201-ZZ	12*22*7	12*22*7	140	95	115	0	10,0
C	0,25	4	Q3E63M4C	Aluminium	123	234	1xM20	80	100	63	162	7,0	40	11	23	12,5	4	6201-ZZ	6201-ZZ	12*22*7	12*22*7	140	95	115	0	10,0
	0,25	4	Q3E71M4B	Aluminium	138	253	1xM20	90	112	71	180	7,0	45	14	30	16,0	5	6202-ZZ	6202-ZZ	15*24*5	15*24*5	160	110	130	0	10,0
	0,37	4	Q3E71M4C	Aluminium	138	253	1xM20	90	112	71	180	7,0	45	14	30	16,0	5	6202-ZZ	6202-ZZ	15*24*5	15*24*5	160	110	130	0	10,0
C	0,55	4	Q3E71M4E	Aluminium	138	262	1xM20	90	112	71	180	7,0	45	14	30	16,0	5	6202-ZZ	6202-ZZ	15*24*5	15*24*5	160	110	130	0	10,0
	0,55	4	Q3H80M4C	Aluminium	158	268	1xM20	100	125	80	216	10,0	50	19	40	21,5	6	6204-ZZ	6204-ZZ	20*30*7	20*30*7	200	130	165	0	12,0
	0,75	4	Q3H80M4D	Aluminium	158	268	1xM20	100	125	80	216	10,0	50	19	40	21,5	6	6204-ZZ	6204-ZZ	20*30*7	20*30*7	200	130	165	0	12,0
C	1,10	4	Q3H80M4DE	Aluminium	158	293	1xM20	100	125	80	216	10,0	50	19	40	21,5	6	6204-ZZ	6204-ZZ	20*30*7	20*30*7	200	130	165	0	12,0
	1,10	4	Q3HS90S4C	Aluminium	158	303	1xM20	100-125	140	90	226	10,0	56	24	50	27,0	8	6305-ZZ	6204-ZZ	25*40*7	20*30*7	200	130	165	0	12,0
	1,10	4	Q3H90L4C	Aluminium	172	344	2xM25	100-125	140	90	236	10,0	56	24	50	27,0	8	6305-ZZ	6205-ZZ	25*40*7	25*40*7	200	130	165	0	12,0
	1,50	4	Q3H90L4D	Aluminium	172	379	2xM25	100-125	140	90	236	10,0	56	24	50	27,0	8	6305-ZZ	6205-ZZ	25*40*7	25*40*7	200	130	165	0	12,0
C	2,20	4	Q3H90L4DE	Aluminium	172	379	2xM25	100-125	140	90	236	10,0	56	24	50	27,0	8	6305-ZZ	6205-ZZ	25*40*7	25*40*7	200	130	165	0	12,0

IE3 THREE PHASE ALUMINIUM MOTORS

	Power (kW)	Number of Poles	Motor Type	Housing Type	Main Dimensions			Foot Mounted Motors						Shaft				Bearing		Seal		Flange (FA B5, B35)				
					AC	L	O	B	A	H	HD	K	C	D	E	GA	F	Drive Side	Non drive Side	Drive Side	Non drive Side	P	N	M	R	S
	2,20	4	Q3H100L4C	Aluminium	191	400	2xM25	140	160	100	243	12,0	63	28	60	31,0	8	6306-ZZ	6205-ZZ	30*47*7	25*40*7	250	180	215	0	14,5
	2,20	4	Q3HS100L4C	Aluminium	172	384	2xM25	140	160	100	246	12,0	63	28	60	31,0	8	6306-ZZ	6205-ZZ	30*47*7	25*40*7	250	180	215	0	14,5
	3,00	4	Q3H100L4D	Aluminium	191	400	2xM25	140	160	100	243	12,0	63	28	60	31,0	8	6306-ZZ	6205-ZZ	30*47*7	25*40*7	250	180	215	0	14,5
	4,00	4	Q3H112M4D	Aluminium	210	396	2xM25	140	190	112	265	12,0	70	28	60	31,0	8	6306-ZZ	6206-ZZ	30*47*7	30*47*7	250	180	215	0	14,5
C	5,50	4	Q3H112M4E	Aluminium	210	421	2xM25	140	190	112	265	12,0	70	28	60	31,0	8	6306-ZZ	6206-ZZ	30*47*7	30*47*7	250	180	215	0	14,5
	5,50	4	Q3H132S4B	Aluminium	260	481	2xM32	140-178	216	132	328	12,0	89	38	80	41,0	10	6208-ZZ	6208-ZZ	40*62*10	40*62*10	300	230	265	0	14,5
	5,50	4	Q3HS132S4B	Aluminium	210	447	2xM25	140-178	216	132	285	12,0	89	38	80	41,0	10	6208-ZZ	6206-ZZ	40*62*10	30*47*7	300	230	265	0	14,5
	7,50	4	Q3H132M4D	Aluminium	260	481	2xM32	140-178	216	132	328	12,0	89	38	80	41,0	10	6208-ZZ	6208-ZZ	40*62*10	40*62*10	300	230	265	0	14,5
C	11,00	4	Q3H132M4E	Aluminium	260	539	2xM32	140-178	216	132	328	12,0	89	38	80	41,0	10	6208-ZZ	6208-ZZ	40*62*10	40*62*10	300	230	265	0	14,5
	11,00	4	Q3H160M4C	Aluminium	305	591	2xM32	210-254	254	160	378	14,5	108	42	110	45,0	12	6309-ZZ	6209-ZZ	45*72*10	45*72*10	350	250	300	0	18,5
	11,00	4	Q3HS160M4C	Aluminium	260	578	2xM32	210-254	254	160	356	14,5	108	42	110	45,0	12	6309-ZZ	6208-ZZ	45*72*10	40*62*10	350	250	300	0	18,5
	15,00	4	Q3H160L4B	Aluminium	305	591	2xM32	210-254	254	160	378	14,5	108	42	110	45,0	12	6309-ZZ	6209-ZZ	45*72*10	45*72*10	350	250	300	0	18,5
C	18,50	4	Q3H160L4C	Aluminium	305	591	2xM32	210-254	254	160	378	14,5	108	42	110	45,0	12	6309-ZZ	6209-ZZ	45*72*10	45*72*10	350	250	300	0	18,5
	18,50	4	Q3H180M4B	Aluminium	348	696	2xM40	241-279	279	180	437	14,5	121	48	110	51,5	14	6310-ZZ	6310-ZZ	50*80*10	50*80*10	350	250	300	0	18,5
	18,50	4	Q3HS180M4B	Aluminium	305	600	2xM32	241-279	279	180	398	14,5	121	48	110	51,5	14	6310-ZZ	6209-ZZ	50*80*10	45*72*10	350	250	300	0	18,5
SC	22,00	4	Q3H160L4DE	Aluminium	305	619	2xM32	210-254	254	160	378	14,5	108	42	110	45,0	12	6309-ZZ	6209-ZZ	45*72*10	45*72*10	350	250	300	0	18,5
	22,00	4	Q3HS180L4B	Aluminium	305	631	2xM32	241-279	279	180	398	14,5	121	48	110	51,5	14	6310-ZZ	6209-ZZ	50*80*10	45*72*10	350	250	300	0	18,5
	22,00	4	Q3H180L4B	Aluminium	348	696	2xM40	241-279	279	180	437	14,5	121	48	110	51,5	14	6310-ZZ	6310-ZZ	50*80*10	50*80*10	350	250	300	0	18,5
C	30,00	4	Q3H180L4C	Aluminium	348	696	2xM40	241-279	279	180	437	14,5	121	48	110	51,5	14	6310-ZZ	6310-ZZ	50*80*10	50*80*10	350	250	300	0	18,5
	30,00	4	Q3H200L4D	Aluminium	348	706	2xM50	267-305	318	200	457	18,5	133	55	110	59,0	16	6312-ZZ	6310-ZZ	60*90*10	50*80*10	400	300	350	0	18,5
	37,00	4	Q3E225S4B	Aluminium	456	765	2xM50	356	286-311	225	485	18,5	149	60	140	64,0	18	6313-ZZ	6313-ZZ	65*100*13	65*100*13	450	350	400	0	18,5
	45,00	4	Q3E225M4C	Aluminium	456	765	2xM50	356	286-311	225	485	18,5	149	60	140	64,0	18	6313-ZZ	6313-ZZ	65*100*13	65*100*13	450	350	400	0	18,5
	55,00	4	Q3E250M4B	Aluminium	456	787	2xM50	311-349	406	250	530	24,0	168	65	140	69,0	18	6315-ZZ	6313-ZZ	75*112*12	65*100*13	550	450	500	0	18,5
	6 pole																									
	0,12	6	Q3E63M6B	Aluminium	123	234	1xM20	80	100	63	162	7,0	40	11	23	12,5	4	6201-ZZ	6201-ZZ	12*22*7	12*22*7	140	95	115	0	10,0
	0,18	6	Q3E71M6A	Aluminium	138	253	1xM20	90	112	71	180	7,0	45	14	30	16,0	5	6202-ZZ	6202-ZZ	15*24*5	15*24*5	160	110	130	0	10,0
	0,25	6	Q3E71M6B	Aluminium	138	262	1xM20	90	112	71	180	7,0	45	14	30	16,0	5	6202-ZZ	6202-ZZ	15*24*5	15*24*5	160	110	130	0	10,0
	0,37	6	Q3H80M6A	Aluminium	158	268	1xM20	100	125	80	216	10,0	50	19	40	21,5	6	6204-ZZ	6204-ZZ	20*30*7	20*30*7	200	130	165	0	12,0
	0,55	6	Q3H80M6B	Aluminium	158	268	1xM20	100	125	80	216	10,0	50	19	40	21,5	6	6204-ZZ	6204-ZZ	20*30*7	20*30*7	200	130	165	0	12,0
	0,75	6	Q3H90L6C	Aluminium	172	344	2xM25	100-125	140	90	236	10,0	56	24	50	27,0	8	6305-ZZ	6205-ZZ	25*40*7	25*40*7	200	130	165	0	12,0
	1,1	6	Q3H90L6D	Aluminium	172	344	2xM25	100-125	140	90	236	10,0	56	24	50	27,0	8	6305-ZZ	6205-ZZ	25*40*7	25*40*7	200	130	165	0	12,0
	1,5	6	Q3HS100L6D	Aluminium	172	384	2xM25	140	160	100	246	12,0	63	28	60	31,0	8	6306-ZZ	6205-ZZ	30*47*7	25*40*7	250	180	215	0	14,5
	1,5	6	Q3H100L6D	Aluminium	191	400	2xM25	140	160	100	243	12,0	63	28	60	31,0	8	6306-ZZ	6205-ZZ	30*47*7	25*40*7	250	180	215	0	14,5
	2,2	6	Q3HS112M6D	Aluminium	191	399	2xM25	140	190	112	260	12,0	70	28	60	31,0	8	6306-ZZ	6205-ZZ	30*47*7	25*40*7	250	180	215	0	14,5
	3	6	Q3H132S6A	Aluminium	260	481	2xM32	140-178	216	132	328	12,0	89	38	80	41,0	10	6208-ZZ	6208-ZZ	40*62*10	40*62*10	300	230	265	0	14,5

IE3 THREE PHASE ALUMINIUM MOTORS

	Power (kW)	Number of Poles	Motor Type	Housing Type	Main Dimensions			Foot Mounted Motors						Shaft				Bearing		Seal		Flange (FA B5, B35)				
					AC	L	O	B	A	H	HD	K	C	D	E	GA	F	Drive Side	Non drive Side	Drive Side	Non drive Side	P	N	M	R	S
	4	6	Q3H132M6A	Aluminium	260	481	2xM32	140-178	216	132	328	12,0	89	38	80	41,0	10	6208-ZZ	6208-ZZ	40*62*10	40*62*10	300	230	265	0	14,5
	5,5	6	Q3H132M6B	Aluminium	260	481	2xM32	140-178	216	132	328	12,0	89	38	80	41,0	10	6208-ZZ	6208-ZZ	40*62*10	40*62*10	300	230	265	0	14,5
	7,5	6	Q3HS160M6C	Aluminium	260	520	2xM32	210-254	254	160	356	14,5	108	42	110	45,0	12	6309-ZZ	6208-ZZ	45*72*10	40*62*10	350	250	300	0	18,5
	7,5	6	Q3H160M6C	Aluminium	305	591	2xM32	210-254	254	160	378	14,5	108	42	110	45,0	12	6309-ZZ	6209-ZZ	45*72*10	45*72*10	350	250	300	0	18,5
	11	6	Q3H160L6D	Aluminium	305	619	2xM32	210-254	254	160	378	14,5	108	42	110	45,0	12	6309-ZZ	6209-ZZ	45*72*10	45*72*10	350	250	300	0	18,5
	15	6	Q3H180L6B	Aluminium	348	696	2xM40	241-279	279	180	437	14,5	121	48	110	51,5	14	6310-ZZ	6310-ZZ	50*80*10	50*80*10	350	250	300	0	18,5
C	18,5	6	Q3H180L6C	Aluminium	348	696	2xM40	241-279	279	180	437	14,5	121	48	110	51,5	14	6310-ZZ	6310-ZZ	50*80*10	50*80*10	350	250	300	0	18,5
	18,5	6	Q3H200L6C	Aluminium	348	706	2xM50	267-305	318	200	457	18,5	133	55	110	59,0	16	6312-ZZ	6310-ZZ	60*90*10	50*80*10	400	300	350	0	18,5
C	22	6	Q3H180L6D	Aluminium	348	750	2xM40	241-279	279	180	437	14,5	121	48	110	51,5	14	6310-ZZ	6310-ZZ	50*80*10	50*80*10	350	250	300	0	18,5
	22	6	Q3H200L6D	Aluminium	348	756	2xM50	267-305	318	200	457	18,5	133	55	110	59,0	16	6312-ZZ	6310-ZZ	60*90*10	50*80*10	400	300	350	0	18,5
8 pole																										
	0,12	8	Q3E71M8C	Aluminium	138	253	1xM20	90	112	71	180	7,0	45	14	30	16,0	5	6202-ZZ	6202-ZZ	15*24*5	15*24*5	160	110	130	0	10,0
	0,18	8	Q3H80M8C	Aluminium	158	268	1xM20	100	125	80	216	10,0	50	19	40	21,5	6	6204-ZZ	6204-ZZ	20*30*7	20*30*7	200	130	165	0	12,0
	0,25	8	Q3H80M8D	Aluminium	158	268	1xM20	100	125	80	216	10,0	50	19	40	21,5	6	6204-ZZ	6204-ZZ	20*30*7	20*30*7	200	130	165	0	12,0
	0,37	8	Q3H90L8C	Aluminium	172	344	2xM25	100-125	140	90	236	10,0	56	24	50	27,0	8	6305-ZZ	6205-ZZ	25*40*7	25*40*7	200	130	165	0	12,0
	0,55	8	Q3H90L8D	Aluminium	172	344	2xM25	100-125	140	90	236	10,0	56	24	50	27,0	8	6305-ZZ	6205-ZZ	25*40*7	25*40*7	200	130	165	0	12,0
	2,20	8	Q3H132M8C	Aluminium	260	481	2xM32	140-178	216	132	328	12,0	89	38	80	41,0	10	6208-ZZ	6208-ZZ	40*62*10	40*62*10	300	230	265	0	14,5
	3,00	8	Q3H132M8D	Aluminium	260	481	2xM32	140-178	216	132	328	12,0	89	38	80	41,0	10	6208-ZZ	6208-ZZ	40*62*10	40*62*10	300	230	265	0	14,5
	4,00	8	Q3H160M8C	Aluminium	305	591	2xM32	210-254	254	160	378	14,5	108	42	110	45,0	12	6309-ZZ	6209-ZZ	45*72*10	45*72*10	350	250	300	0	18,5
	5,50	8	Q3H160L8C	Aluminium	305	591	2xM32	210-254	254	160	378	14,5	108	42	110	45,0	12	6309-ZZ	6209-ZZ	45*72*10	45*72*10	350	250	300	0	18,5
	7,50	8	Q3H160L8D	Aluminium	305	591	2xM32	210-254	254	160	378	14,5	108	42	110	45,0	12	6309-ZZ	6209-ZZ	45*72*10	45*72*10	350	250	300	0	18,5
	11,00	8	Q3H180L8B	Aluminium	348	696	2xM40	241-279	279	180	437	14,5	121	48	110	51,5	14	6310-ZZ	6310-ZZ	50*80*10	50*80*10	350	250	300	0	18,5
	11,00	8	Q3H200L8C	Aluminium	348	706	2xM50	267-305	318	200	457	18,5	133	55	110	59,0	16	6312-ZZ	6310-ZZ	60*90*10	50*80*10	400	300	350	0	18,5
	15,00	8	Q3H200L8D	Aluminium	348	756	2xM50	267-305	318	200	457	18,5	133	55	110	59,0	16	6312-ZZ	6310-ZZ	60*90*10	50*80*10	400	300	350	0	18,5
	18,50	8	Q3E225M8B	Aluminium	456	765	2xM50	356	286-311	225	485	18,5	149	60	140	64,0	18	6313-ZZ	6313-ZZ	65*100*13	65*100*13	450	350	400	0	18,5
	22,00	8	Q3E225M8C	Aluminium	456	765	2xM50	356	286-311	225	485	18,5	149	60	140	64,0	18	6313-ZZ	6313-ZZ	65*100*13	65*100*13	450	350	400	0	18,5

IE3 THREE PHASE ALUMINIUM MOTORS

DIMENSION - B14a, B34a

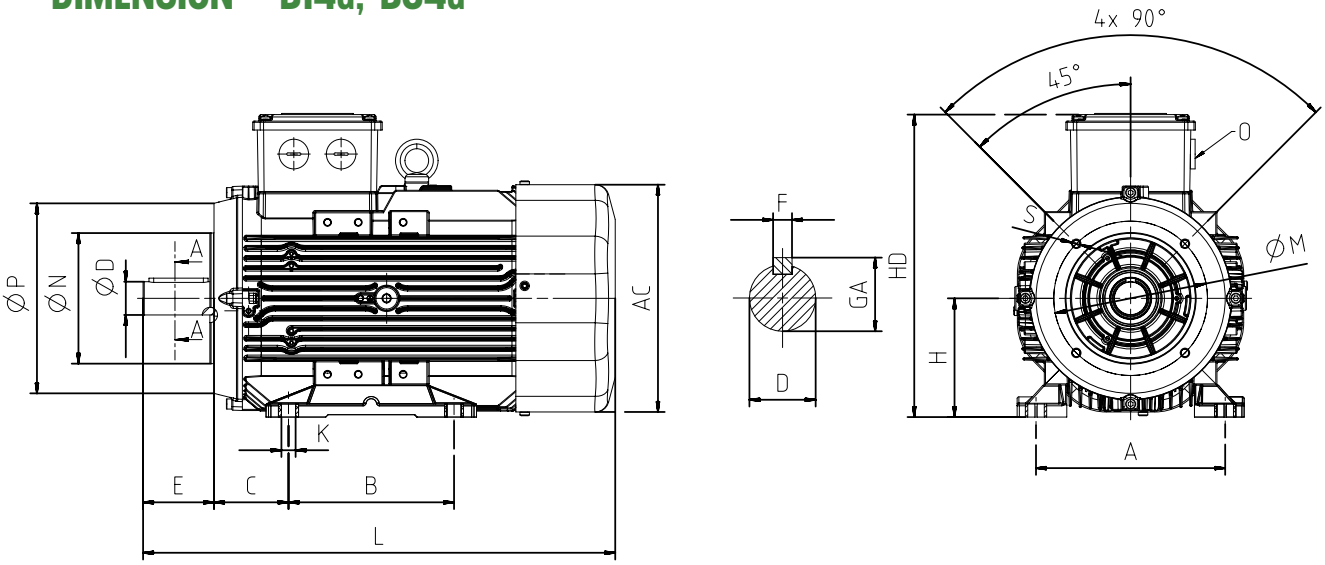

	Power [kW]	Number of Poles	Motor Type	Housing Type	Main Dimensions			Foot Mounted Motors						Shaft				Bearing		Seal		Flange (FC B14a, B34a)				
					AC	L	O	B	A	H	HD	K	C	D	E	GA	F	Drive Side	Non drive Side	Drive Side	Non drive Side	P	N	M	R	S
	2 pole																									
	0,12	2	Q3E63M2K	Aluminium	123	220	1xM20	80	100	63	162	7,0	40	11	23	12,5	4	6201-ZZ	6201-ZZ	12*22*7	12*22*7	90	60	75	0	M5
	0,18	2	Q3E63M2A	Aluminium	123	220	1xM20	80	100	63	162	7,0	40	11	23	12,5	4	6201-ZZ	6201-ZZ	12*22*7	12*22*7	90	60	75	0	M5
	0,25	2	Q3E63M2B	Aluminium	123	220	1xM20	80	100	63	162	7,0	40	11	23	12,5	4	6201-ZZ	6201-ZZ	12*22*7	12*22*7	90	60	75	0	M5
C	0,37	2	Q3E63M2C	Aluminium	123	234	1xM20	80	100	63	162	7,0	40	11	23	12,5	4	6201-ZZ	6201-ZZ	12*22*7	12*22*7	90	60	75	0	M5
	0,37	2	Q3E71M2A	Aluminium	138	253	1xM20	90	112	71	180	7,0	45	14	30	16,0	5	6202-ZZ	6202-ZZ	15*24*5	15*24*5	105	70	85	0	M6
	0,55	2	Q3E71M2B	Aluminium	138	253	1xM20	90	112	71	180	7,0	45	14	30	16,0	5	6202-ZZ	6202-ZZ	15*24*5	15*24*5	105	70	85	0	M6
C	0,75	2	Q3E71M2D	Aluminium	138	262	1xM20	90	112	71	180	7,0	45	14	30	16,0	5	6202-ZZ	6202-ZZ	15*24*5	15*24*5	105	70	85	0	M6
	0,75	2	Q3H80M2C	Aluminium	158	268	1xM20	100	125	80	216	10,0	50	19	40	21,5	6	6204-ZZ	6204-ZZ	20*30*7	20*30*7	120	80	100	0	M6
	1,10	2	Q3H80M2D	Aluminium	158	268	1xM20	100	125	80	216	10,0	50	19	40	21,5	6	6204-ZZ	6204-ZZ	20*30*7	20*30*7	120	80	100	0	M6
C	1,50	2	Q3H80M2DE	Aluminium	158	293	1xM20	100	125	80	216	10,0	50	19	40	21,5	6	6204-ZZ	6204-ZZ	20*30*7	20*30*7	120	80	100	0	M6
	1,50	2	Q3H90L2C	Aluminium	172	344	2xM25	100-125	140	90	236	10,0	56	24	50	27,0	8	6305-ZZ	6205-ZZ	25*40*7	25*40*7	140	95	115	0	M8
	1,50	2	Q3HS90S2C	Aluminium	158	303	1xM20	100-125	140	90	226	10,0	56	24	50	27,0	8	6305-ZZ	6204-ZZ	25*40*7	20*30*7	140	95	115	0	M8
	2,20	2	Q3H90L2D	Aluminium	172	344	2xM25	100-125	140	90	236	10,0	56	24	50	27,0	8	6305-ZZ	6205-ZZ	25*40*7	25*40*7	140	95	115	0	M8
C	3,00	2	Q3H90L2E	Aluminium	172	344	2xM25	100-125	140	90	236	10,0	56	24	50	27,0	8	6305-ZZ	6205-ZZ	25*40*7	25*40*7	140	95	115	0	M8
	3,00	2	Q3H100L2D	Aluminium	191	400	2xM25	140	160	100	243	12,0	63	28	60	31,0	8	6306-ZZ	6205-ZZ	30*47*7	25*40*7	160	110	130	0	M8
	3,00	2	Q3HS100L2C	Aluminium	172	349	2xM25	140	160	100	246	12,0	63	28	60	31,0	8	6306-ZZ	6205-ZZ	30*47*7	25*40*7	160	110	130	0	M8
C	4,00	2	Q3H100L2DE	Aluminium	191	400	2xM25	140	160	100	243	12,0	63	28	60	31,0	8	6306-ZZ	6205-ZZ	30*47*7	25*40*7	160	110	130	0	M8
	4,00	2	Q3H112M2C	Aluminium	210	396	2xM25	140	190	112	265	12,0	70	28	60	31,0	8	6306-ZZ	6206-ZZ	30*47*7	30*47*7	160	110	130	0	M8
	4,00	2	Q3HS112M2C	Aluminium	191	399	2xM25	140	190	112	260	12,0	70	28	60	31,0	8	6306-ZZ	6205-ZZ	30*47*7	25*40*7	160	110	130	0	M8
SC	5,50	2	Q3H100L2E	Aluminium	191	400	2xM25	140	160	100	243	12,0	63	28	60	31,0	8	6306-ZZ	6205-ZZ	30*47*7	25*40*7	160	110	130	0	M8
C	5,50	2	Q3H112M2D	Aluminium	210	396	2xM25	140	190	112	265	12,0	70	28	60	31,0	8	6306-ZZ	6206-ZZ	30*47*7	30*47*7	160	110	130	0	M8
	5,50	2	Q3H132S2C	Aluminium	260	481	2xM32	140-178	216	132	328	12,0	89	38	80	41,0	10	6208-ZZ	6208-ZZ	40*62*10	40*62*10	200	130	165	0	M10

IE3 THREE PHASE ALUMINIUM MOTORS

	Power (kW)	Number of Poles	Motor Type	Housing Type	Main Dimensions			Foot Mounted Motors						Shaft				Bearing		Seal		Flange (FC B14a, B34a)				
					AC	L	O	B	A	H	HD	K	C	D	E	GA	F	Drive Side	Non drive Side	Drive Side	Non drive Side	P	N	M	R	S
	5,50	2	Q3HS132S2C	Aluminium	210	422	2xM25	140-178	216	132	285	12,0	89	38	80	41,0	10	6208-ZZ	6206-ZZ	40*62*10	30*47*7	200	130	165	0	M10
C	7,50	2	Q3H112M2DE	Aluminium	210	421	2xM25	140	190	112	265	12,0	70	28	60	31,0	8	6306-ZZ	6206-ZZ	30*47*7	30*47*7	160	110	130	0	M8
	7,50	2	Q3H132S2D	Aluminium	260	481	2xM32	140-178	216	132	328	12,0	89	38	80	41,0	10	6208-ZZ	6208-ZZ	40*62*10	40*62*10	200	130	165	0	M10
	7,50	2	Q3HS132S2D	Aluminium	210	447	2xM25	140-178	216	132	285	12,0	89	38	80	41,0	10	6208-ZZ	6206-ZZ	40*62*10	30*47*7	200	130	165	0	M10
C	11,00	2	Q3H132M2A	Aluminium	260	481	2xM32	140-178	216	132	328	12,0	89	38	80	41,0	10	6208-ZZ	6208-ZZ	40*62*10	40*62*10	200	130	165	0	M10
	11,00	2	Q3H160M2C	Aluminium	305	591	2xM32	210-254	254	160	378	14,5	108	42	110	45,0	12	6309-ZZ	6209-ZZ	45*72*10	45*72*10	250	180	215	0	M10
	11,00	2	Q3HS160M2D	Aluminium	260	520	2xM32	210-254	254	160	356	14,5	108	42	110	45,0	12	6309-ZZ	6208-ZZ	45*72*10	40*62*10	-	-	-	-	-
C	15,00	2	Q3H132M2B	Aluminium	260	539	2xM32	140-178	216	132	328	12,0	89	38	80	41,0	10	6208-ZZ	6208-ZZ	40*62*10	40*62*10	200	130	165	0	M10
	15,00	2	Q3H160M2D	Aluminium	305	591	2xM32	210-254	254	160	378	14,5	108	42	110	45,0	12	6309-ZZ	6209-ZZ	45*72*10	45*72*10	250	180	215	0	M10
	18,50	2	Q3H160L2C	Aluminium	305	591	2xM32	210-254	254	160	378	14,5	108	42	110	45,0	12	6309-ZZ	6209-ZZ	45*72*10	45*72*10	250	180	215	0	M10
C	22,00	2	Q3H160L2D	Aluminium	305	591	2xM32	210-254	254	160	378	14,5	108	42	110	45,0	12	6309-ZZ	6209-ZZ	45*72*10	45*72*10	250	180	215	0	M10
	22,00	2	Q3H180M2A	Aluminium	348	696	2xM40	241-279	279	180	437	14,5	121	48	110	51,5	14	6310-ZZ	6310-ZZ	50*80*10	50*80*10	-	-	-	-	-
	22,00	2	Q3HS180M2B	Aluminium	305	600	2xM32	241-279	279	180	398	14,5	121	48	110	51,5	14	6310-ZZ	6209-ZZ	50*80*10	45*72*10	-	-	-	-	-
C	30,00	2	Q3H180M2B	Aluminium	348	696	2xM40	241-279	279	180	437	14,5	121	48	110	51,5	14	6310-ZZ	6310-ZZ	50*80*10	50*80*10	-	-	-	-	-
	30,00	2	Q3H200L2C	Aluminium	348	706	2xM50	267-305	318	200	457	18,5	133	55	110	59,0	16	6312-ZZ	6310-ZZ	60*90*10	50*80*10	-	-	-	-	-
C	37,00	2	Q3H180L2D	Aluminium	348	696	2xM40	241-279	279	180	437	14,5	121	48	110	51,5	14	6310-ZZ	6310-ZZ	50*80*10	50*80*10	-	-	-	-	-
	37,00	2	Q3H200L2D	Aluminium	348	706	2xM50	267-305	318	200	457	18,5	133	55	110	59,0	16	6312-ZZ	6310-ZZ	60*90*10	50*80*10	-	-	-	-	-
SC	45,00	2	Q3H180L2DE	Aluminium	348	750	2xM40	241-279	279	180	437	14,5	121	48	110	51,5	14	6310-ZZ	6310-ZZ	50*80*10	50*80*10	-	-	-	-	-
C	45,00	2	Q3H200L2DE	Aluminium	348	756	2xM50	267-305	318	200	457	18,5	133	55	110	59,0	16	6312-ZZ	6310-ZZ	60*90*10	50*80*10	-	-	-	-	-
	45,00	2	Q3E225M2B	Aluminium	456	735	2xM50	356	286-311	225	485	18,5	149	55	110	59,0	16	6313-ZZ	6313-ZZ	65*100*13	65*100*13	-	-	-	-	-
	55,00	2	Q3E250M2B	Aluminium	456	787	2xM50	311-349	406	250	530	24,0	168	60	140	64,0	18	6315-ZZ	6313-ZZ	75*112*12	65*100*13	-	-	-	-	-
	4 pole																									
	0,12	4	Q3E63M4A	Aluminium	123	220	1xM20	80	100	63	162	7,0	40	11	23	12,5	4	6201-ZZ	6201-ZZ	12*22*7	12*22*7	90	60	75	0	M5
	0,18	4	Q3E63M4B	Aluminium	123	220	1xM20	80	100	63	162	7,0	40	11	23	12,5	4	6201-ZZ	6201-ZZ	12*22*7	12*22*7	90	60	75	0	M5
C	0,25	4	Q3E63M4C	Aluminium	123	234	1xM20	80	100	63	162	7,0	40	11	23	12,5	4	6201-ZZ	6201-ZZ	12*22*7	12*22*7	90	60	75	0	M5
	0,25	4	Q3E71M4B	Aluminium	138	253	1xM20	90	112	71	180	7,0	45	14	30	16,0	5	6202-ZZ	6202-ZZ	15*24*5	15*24*5	105	70	85	0	M6
	0,37	4	Q3E71M4C	Aluminium	138	253	1xM20	90	112	71	180	7,0	45	14	30	16,0	5	6202-ZZ	6202-ZZ	15*24*5	15*24*5	105	70	85	0	M6
C	0,55	4	Q3E71M4E	Aluminium	138	262	1xM20	90	112	71	180	7,0	45	14	30	16,0	5	6202-ZZ	6202-ZZ	15*24*5	15*24*5	105	70	85	0	M6
	0,55	4	Q3H80M4C	Aluminium	158	268	1xM20	100	125	80	216	10,0	50	19	40	21,5	6	6204-ZZ	6204-ZZ	20*30*7	20*30*7	120	80	100	0	M6
	0,75	4	Q3H80M4D	Aluminium	158	268	1xM20	100	125	80	216	10,0	50	19	40	21,5	6	6204-ZZ	6204-ZZ	20*30*7	20*30*7	120	80	100	0	M6
C	1,10	4	Q3H80M4DE	Aluminium	158	293	1xM20	100	125	80	216	10,0	50	19	40	21,5	6	6204-ZZ	6204-ZZ	20*30*7	20*30*7	120	80	100	0	M6
	1,10	4	Q3HS90S4C	Aluminium	158	303	1xM20	100-125	140	90	226	10,0	56	24	50	27,0	8	6305-ZZ	6204-ZZ	25*40*7	20*30*7	140	95	115	0	M8
	1,10	4	Q3H90L4C	Aluminium	172	344	2xM25	100-125	140	90	236	10,0	56	24	50	27,0	8	6305-ZZ	6205-ZZ	25*40*7	25*40*7	140	95	115	0	M8
	1,50	4	Q3H90L4D	Aluminium	172	379	2xM25	100-125	140	90	236	10,0	56	24	50	27,0	8	6305-ZZ	6205-ZZ	25*40*7	25*40*7	140	95	115	0	M8
C	2,20	4	Q3H90L4DE	Aluminium	172	379	2xM25	100-125	140	90	236	10,0	56	24	50	27,0	8	6305-ZZ	6205-ZZ	25*40*7	25*40*7	140	95	115	0	M8

IE3 THREE PHASE ALUMINIUM MOTORS

	Power [kW]	Number of Poles	Motor Type	Housing Type	Main Dimensions			Foot Mounted Motors						Shaft				Bearing		Seal		Flange [FC B14a, B34a]				
					AC	L	O	B	A	H	HD	K	C	D	E	GA	F	Drive Side	Non drive Side	Drive Side	Non drive Side	P	N	M	R	S
	2,20	4	Q3H100L4C	Aluminium	191	400	2xM25	140	160	100	243	12,0	63	28	60	31,0	8	6306-ZZ	6205-ZZ	30*47*7	25*40*7	160	110	130	0	M8
	2,20	4	Q3HS100L4C	Aluminium	172	384	2xM25	140	160	100	246	12,0	63	28	60	31,0	8	6306-ZZ	6205-ZZ	30*47*7	25*40*7	160	110	130	0	M8
	3,00	4	Q3H100L4D	Aluminium	191	400	2xM25	140	160	100	243	12,0	63	28	60	31,0	8	6306-ZZ	6205-ZZ	30*47*7	25*40*7	160	110	130	0	M8
	4,00	4	Q3H112M4D	Aluminium	210	396	2xM25	140	190	112	265	12,0	70	28	60	31,0	8	6306-ZZ	6206-ZZ	30*47*7	30*47*7	160	110	130	0	M8
C	5,50	4	Q3H112M4E	Aluminium	210	421	2xM25	140	190	112	265	12,0	70	28	60	31,0	8	6306-ZZ	6206-ZZ	30*47*7	30*47*7	160	110	130	0	M8
	5,50	4	Q3H132S4B	Aluminium	260	481	2xM32	140-178	216	132	328	12,0	89	38	80	41,0	10	6208-ZZ	6208-ZZ	40*62*10	40*62*10	200	130	165	0	M10
	5,50	4	Q3HS132S4B	Aluminium	210	447	2xM25	140-178	216	132	285	12,0	89	38	80	41,0	10	6208-ZZ	6206-ZZ	40*62*10	30*47*7	200	130	165	0	M10
	7,50	4	Q3H132M4D	Aluminium	260	481	2xM32	140-178	216	132	328	12,0	89	38	80	41,0	10	6208-ZZ	6208-ZZ	40*62*10	40*62*10	200	130	165	0	M10
C	11,00	4	Q3H132M4E	Aluminium	260	539	2xM32	140-178	216	132	328	12,0	89	38	80	41,0	10	6208-ZZ	6208-ZZ	40*62*10	40*62*10	200	130	165	0	M10
	11,00	4	Q3H160M4C	Aluminium	305	591	2xM32	210-254	254	160	378	14,5	108	42	110	45,0	12	6309-ZZ	6209-ZZ	45*72*10	45*72*10	250	180	215	0	M10
	11,00	4	Q3HS160M4C	Aluminium	260	578	2xM32	210-254	254	160	356	14,5	108	42	110	45,0	12	6309-ZZ	6208-ZZ	45*72*10	40*62*10	-	-	-	-	-
	15,00	4	Q3H160L4B	Aluminium	305	591	2xM32	210-254	254	160	378	14,5	108	42	110	45,0	12	6309-ZZ	6209-ZZ	45*72*10	45*72*10	250	180	215	0	M10
C	18,50	4	Q3H160L4C	Aluminium	305	591	2xM32	210-254	254	160	378	14,5	108	42	110	45,0	12	6309-ZZ	6209-ZZ	45*72*10	45*72*10	250	180	215	0	M10
	18,50	4	Q3H180M4B	Aluminium	348	696	2xM40	241-279	279	180	437	14,5	121	48	110	51,5	14	6310-ZZ	6310-ZZ	50*80*10	50*80*10	-	-	-	-	-
	18,50	4	Q3HS180M4B	Aluminium	305	600	2xM32	241-279	279	180	398	14,5	121	48	110	51,5	14	6310-ZZ	6209-ZZ	50*80*10	45*72*10	-	-	-	-	-
SC	22,00	4	Q3H160L4DE	Aluminium	305	619	2xM32	210-254	254	160	378	14,5	108	42	110	45,0	12	6309-ZZ	6209-ZZ	45*72*10	45*72*10	250	180	215	0	M10
	22,00	4	Q3HS180L4B	Aluminium	305	631	2xM32	241-279	279	180	398	14,5	121	48	110	51,5	14	6310-ZZ	6209-ZZ	50*80*10	45*72*10	-	-	-	-	-
	22,00	4	Q3H180L4B	Aluminium	348	696	2xM40	241-279	279	180	437	14,5	121	48	110	51,5	14	6310-ZZ	6310-ZZ	50*80*10	50*80*10	-	-	-	-	-
C	30,00	4	Q3H180L4C	Aluminium	348	696	2xM40	241-279	279	180	437	14,5	121	48	110	51,5	14	6310-ZZ	6310-ZZ	50*80*10	50*80*10	-	-	-	-	-
	30,00	4	Q3H200L4D	Aluminium	348	706	2xM50	267-305	318	200	457	18,5	133	55	110	59,0	16	6312-ZZ	6310-ZZ	60*90*10	50*80*10	-	-	-	-	-
	37,00	4	Q3E225S4B	Aluminium	456	765	2xM50	356	286-311	225	485	18,5	149	60	140	64,0	18	6313-ZZ	6313-ZZ	65*100*13	65*100*13	-	-	-	-	-
	45,00	4	Q3E225M4C	Aluminium	456	765	2xM50	356	286-311	225	485	18,5	149	60	140	64,0	18	6313-ZZ	6313-ZZ	65*100*13	65*100*13	-	-	-	-	-
	55,00	4	Q3E250M4B	Aluminium	456	787	2xM50	311-349	406	250	530	24,0	168	65	140	69,0	18	6315-ZZ	6313-ZZ	75*112*12	65*100*13	-	-	-	-	-
	6 pole																									
	0,12	6	Q3E63M6B	Aluminium	123	234	1xM20	80	100	63	162	7,0	40	11	23	12,5	4	6201-ZZ	6201-ZZ	12*22*7	12*22*7	90	60	75	0	M5
	0,18	6	Q3E71M6A	Aluminium	138	253	1xM20	90	112	71	180	7,0	45	14	30	16,0	5	6202-ZZ	6202-ZZ	15*24*5	15*24*5	105	70	85	0	M6
	0,25	6	Q3E71M6B	Aluminium	138	262	1xM20	90	112	71	180	7,0	45	14	30	16,0	5	6202-ZZ	6202-ZZ	15*24*5	15*24*5	105	70	85	0	M6
	0,37	6	Q3H80M6A	Aluminium	158	268	1xM20	100	125	80	216	10,0	50	19	40	21,5	6	6204-ZZ	6204-ZZ	20*30*7	20*30*7	120	80	100	0	M6
	0,55	6	Q3H80M6B	Aluminium	158	268	1xM20	100	125	80	216	10,0	50	19	40	21,5	6	6204-ZZ	6204-ZZ	20*30*7	20*30*7	120	80	100	0	M6
	0,75	6	Q3H90L6C	Aluminium	172	344	2xM25	100-125	140	90	236	10,0	56	24	50	27,0	8	6305-ZZ	6205-ZZ	25*40*7	25*40*7	140	95	115	0	M8
	1,10	6	Q3H90L6D	Aluminium	172	344	2xM25	100-125	140	90	236	10,0	56	24	50	27,0	8	6305-ZZ	6205-ZZ	25*40*7	25*40*7	140	95	115	0	M8
	1,50	6	Q3HS100L6D	Aluminium	172	384	2xM25	140	160	100	246	12,0	63	28	60	31,0	8	6306-ZZ	6205-ZZ	30*47*7	25*40*7	160	110	130	0	M8
	1,50	6	Q3H100L6D	Aluminium	191	400	2xM25	140	160	100	243	12,0	63	28	60	31,0	8	6306-ZZ	6205-ZZ	30*47*7	25*40*7	160	110	130	0	M8

IE3 THREE PHASE ALUMINIUM MOTORS

	Power [kW]	Number of Poles	Motor Type	Housing Type	Main Dimensions			Foot Mounted Motors						Shaft				Bearing		Seal		Flange (FC B14a, B34a)				
					AC	L	O	B	A	H	HD	K	C	D	E	GA	F	Drive Side	Non drive Side	Drive Side	Non drive Side	P	N	M	R	S
	2,20	6	Q3HS112M6D	Aluminium	191	399	2xM25	140	190	112	260	12,0	70	28	60	31,0	8	6306-ZZ	6205-ZZ	30*47*7	25*40*7	160	110	130	0	M8
	3,00	6	Q3H132S6A	Aluminium	260	481	2xM32	140-178	216	132	328	12,0	89	38	80	41,0	10	6208-ZZ	6208-ZZ	40*62*10	40*62*10	200	130	165	0	M10
	4,00	6	Q3H132M6A	Aluminium	260	481	2xM32	140-178	216	132	328	12,0	89	38	80	41,0	10	6208-ZZ	6208-ZZ	40*62*10	40*62*10	200	130	165	0	M10
	5,50	6	Q3H132M6B	Aluminium	260	481	2xM32	140-178	216	132	328	12,0	89	38	80	41,0	10	6208-ZZ	6208-ZZ	40*62*10	40*62*10	200	130	165	0	M10
	7,50	6	Q3HS160M6C	Aluminium	260	520	2xM32	210-254	254	160	356	14,5	108	42	110	45,0	12	6309-ZZ	6208-ZZ	45*72*10	40*62*10	-	-	-	-	-
	7,50	6	Q3H160M6C	Aluminium	305	591	2xM32	210-254	254	160	378	14,5	108	42	110	45,0	12	6309-ZZ	6209-ZZ	45*72*10	45*72*10	250	180	215	0	M10
	11,00	6	Q3H160L6D	Aluminium	305	619	2xM32	210-254	254	160	378	14,5	108	42	110	45,0	12	6309-ZZ	6209-ZZ	45*72*10	45*72*10	250	180	215	0	M10
	15,00	6	Q3H180L6B	Aluminium	348	696	2xM40	241-279	279	180	437	14,5	121	48	110	51,5	14	6310-ZZ	6310-ZZ	50*80*10	50*80*10	-	-	-	-	-
C	18,50	6	Q3H180L6C	Aluminium	348	696	2xM40	241-279	279	180	437	14,5	121	48	110	51,5	14	6310-ZZ	6310-ZZ	50*80*10	50*80*10	-	-	-	-	-
	18,50	6	Q3H200L6C	Aluminium	348	706	2xM50	267-305	318	200	457	18,5	133	55	110	59,0	16	6312-ZZ	6310-ZZ	60*90*10	50*80*10	-	-	-	-	-
C	22,00	6	Q3H180L6D	Aluminium	348	750	2xM40	241-279	279	180	437	14,5	121	48	110	51,5	14	6310-ZZ	6310-ZZ	50*80*10	50*80*10	-	-	-	-	-
	22,00	6	Q3H200L6D	Aluminium	348	756	2xM50	267-305	318	200	457	18,5	133	55	110	59,0	16	6312-ZZ	6310-ZZ	60*90*10	50*80*10	-	-	-	-	-
	8 pole																									
	0,12	8	Q3E71M8C	Aluminium	138	253	1xM20	90	112	71	180	7,0	45	14	30	16,0	5	6202-ZZ	6202-ZZ	15*24*5	15*24*5	105	70	85	0	M6
	0,18	8	Q3H80M8C	Aluminium	158	268	1xM20	100	125	80	216	10,0	50	19	40	21,5	6	6204-ZZ	6204-ZZ	20*30*7	20*30*7	120	80	100	0	M6
	0,25	8	Q3H80M8D	Aluminium	158	268	1xM20	100	125	80	216	10,0	50	19	40	21,5	6	6204-ZZ	6204-ZZ	20*30*7	20*30*7	120	80	100	0	M6
	0,37	8	Q3H90L8C	Aluminium	172	344	2xM25	100-125	140	90	236	10,0	56	24	50	27,0	8	6305-ZZ	6205-ZZ	25*40*7	25*40*7	140	95	115	0	M8
	0,55	8	Q3H90L8D	Aluminium	172	344	2xM25	100-125	140	90	236	10,0	56	24	50	27,0	8	6305-ZZ	6205-ZZ	25*40*7	25*40*7	140	95	115	0	M8
	2,20	8	Q3H132M8C	Aluminium	260	481	2xM32	140-178	216	132	328	12,0	89	38	80	41,0	10	6208-ZZ	6208-ZZ	40*62*10	40*62*10	200	130	165	0	M10
	3,00	8	Q3H132M8D	Aluminium	260	481	2xM32	140-178	216	132	328	12,0	89	38	80	41,0	10	6208-ZZ	6208-ZZ	40*62*10	40*62*10	200	130	165	0	M10
	4,00	8	Q3H160M8C	Aluminium	305	591	2xM32	210-254	254	160	378	14,5	108	42	110	45,0	12	6309-ZZ	6209-ZZ	45*72*10	45*72*10	250	180	215	0	M10
	5,50	8	Q3H160L8C	Aluminium	305	591	2xM32	210-254	254	160	378	14,5	108	42	110	45,0	12	6309-ZZ	6209-ZZ	45*72*10	45*72*10	250	180	215	0	M10
	7,50	8	Q3H160L8D	Aluminium	305	591	2xM32	210-254	254	160	378	14,5	108	42	110	45,0	12	6309-ZZ	6209-ZZ	45*72*10	45*72*10	250	180	215	0	M10
	11,00	8	Q3H180L8B	Aluminium	348	696	2xM40	241-279	279	180	437	14,5	121	48	110	51,5	14	6310-ZZ	6310-ZZ	50*80*10	50*80*10	-	-	-	-	-
	11,00	8	Q3H200L8C	Aluminium	348	706	2xM50	267-305	318	200	457	18,5	133	55	110	59,0	16	6312-ZZ	6310-ZZ	60*90*10	50*80*10	-	-	-	-	-
	15,00	8	Q3H200L8D	Aluminium	348	756	2xM50	267-305	318	200	457	18,5	133	55	110	59,0	16	6312-ZZ	6310-ZZ	60*90*10	50*80*10	-	-	-	-	-
	18,50	8	Q3E225M8B	Aluminium	456	765	2xM50	356	286-311	225	485	18,5	149	60	140	64,0	18	6313-ZZ	6313-ZZ	65*100*13	65*100*13	-	-	-	-	-
	22,00	8	Q3E225M8C	Aluminium	456	765	2xM50	356	286-311	225	485	18,5	149	60	140	64,0	18	6313-ZZ	6313-ZZ	65*100*13	65*100*13	-	-	-	-	-

IE3 THREE PHASE ALUMINIUM MOTORS

DIMENSION - B14b, B34b

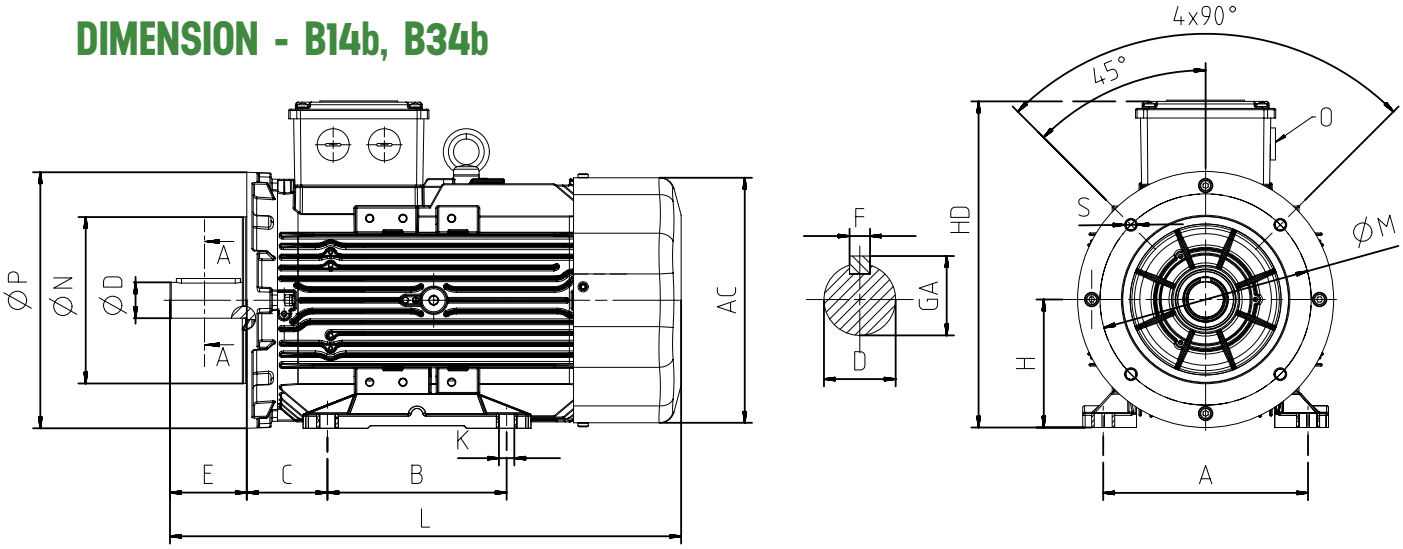

	Power [kW]	Number of Poles	Motor Type	Housing Type	Main Dimensions			Foot Mounted Motors						Shaft				Bearing		Seal		Flange [FB B14b, B34b]				
					AC	L	O	B	A	H	HD	K	C	D	E	GA	F	Drive Side	Non drive Side	Drive Side	Non drive Side	P	N	M	R	S
2 pole																										
	0,12	2	Q3E63M2K	Aluminium	123	220	1xM20	80	100	63	162	7,0	40	11	23	12,5	4	6201-ZZ	6201-ZZ	12*22*7	12*22*7	120	80	100	0	M6
	0,18	2	Q3E63M2A	Aluminium	123	220	1xM20	80	100	63	162	7,0	40	11	23	12,5	4	6201-ZZ	6201-ZZ	12*22*7	12*22*7	120	80	100	0	M6
	0,25	2	Q3E63M2B	Aluminium	123	220	1xM20	80	100	63	162	7,0	40	11	23	12,5	4	6201-ZZ	6201-ZZ	12*22*7	12*22*7	120	80	100	0	M6
C	0,37	2	Q3E63M2C	Aluminium	123	234	1xM20	80	100	63	162	7,0	40	11	23	12,5	4	6201-ZZ	6201-ZZ	12*22*7	12*22*7	120	80	100	0	M6
	0,37	2	Q3E71M2A	Aluminium	138	253	1xM20	90	112	71	180	7,0	45	14	30	16,0	5	6202-ZZ	6202-ZZ	15*24*5	15*24*5	140	95	115	0	M8
	0,55	2	Q3E71M2B	Aluminium	138	253	1xM20	90	112	71	180	7,0	45	14	30	16,0	5	6202-ZZ	6202-ZZ	15*24*5	15*24*5	140	95	115	0	M8
C	0,75	2	Q3E71M2D	Aluminium	138	262	1xM20	90	112	71	180	7,0	45	14	30	16,0	5	6202-ZZ	6202-ZZ	15*24*5	15*24*5	140	95	115	0	M8
	0,75	2	Q3H80M2C	Aluminium	158	268	1xM20	100	125	80	216	10,0	50	19	40	21,5	6	6204-ZZ	6204-ZZ	20*30*7	20*30*7	160	110	130	0	M8
	1,10	2	Q3H80M2D	Aluminium	158	268	1xM20	100	125	80	216	10,0	50	19	40	21,5	6	6204-ZZ	6204-ZZ	20*30*7	20*30*7	160	110	130	0	M8
C	1,50	2	Q3H80M2DE	Aluminium	158	293	1xM20	100	125	80	216	10,0	50	19	40	21,5	6	6204-ZZ	6204-ZZ	20*30*7	20*30*7	160	110	130	0	M8
	1,50	2	Q3H90L2C	Aluminium	172	344	2xM25	100-125	140	90	236	10,0	56	24	50	27,0	8	6305-ZZ	6205-ZZ	25*40*7	25*40*7	160	110	130	0	M8
	1,50	2	Q3HS90S2C	Aluminium	158	303	1xM20	100-125	140	90	226	10,0	56	24	50	27,0	8	6305-ZZ	6204-ZZ	25*40*7	20*30*7	160	110	130	0	M8
	2,20	2	Q3H90L2D	Aluminium	172	344	2xM25	100-125	140	90	236	10,0	56	24	50	27,0	8	6305-ZZ	6205-ZZ	25*40*7	25*40*7	160	110	130	0	M8
C	3,00	2	Q3H90L2E	Aluminium	172	344	2xM25	100-125	140	90	236	10,0	56	24	50	27,0	8	6305-ZZ	6205-ZZ	25*40*7	25*40*7	160	110	130	0	M8
	3,00	2	Q3H100L2D	Aluminium	191	400	2xM25	140	160	100	243	12,0	63	28	60	31,0	8	6306-ZZ	6205-ZZ	30*47*7	25*40*7	200	130	165	0	M10
	3,00	2	Q3HS100L2C	Aluminium	172	349	2xM25	140	160	100	246	12,0	63	28	60	31,0	8	6306-ZZ	6205-ZZ	30*47*7	25*40*7	200	130	165	0	M10
C	4,00	2	Q3H100L2DE	Aluminium	191	400	2xM25	140	160	100	243	12,0	63	28	60	31,0	8	6306-ZZ	6205-ZZ	30*47*7	25*40*7	200	130	165	0	M10
	4,00	2	Q3H112M2C	Aluminium	210	396	2xM25	140	190	112	265	12,0	70	28	60	31,0	8	6306-ZZ	6206-ZZ	30*47*7	30*47*7	200	130	165	0	M10
	4,00	2	Q3HS112M2C	Aluminium	191	399	2xM25	140	190	112	260	12,0	70	28	60	31,0	8	6306-ZZ	6205-ZZ	30*47*7	25*40*7	200	130	165	0	M10
SC	5,50	2	Q3H100L2E	Aluminium	191	400	2xM25	140	160	100	243	12,0	63	28	60	31,0	8	6306-ZZ	6205-ZZ	30*47*7	25*40*7	200	130	165	0	M10
C	5,50	2	Q3H112M2D	Aluminium	210	396	2xM25	140	190	112	265	12,0	70	28	60	31,0	8	6306-ZZ	6206-ZZ	30*47*7	30*47*7	200	130	165	0	M10
	5,50	2	Q3H132S2C	Aluminium	260	481	2xM32	140-178	216	132	328	12,0	89	38	80	41,0	10	6208-ZZ	6208-ZZ	40*62*10	40*62*10	250	180	215	0	M12
	5,50	2	Q3HS132S2C	Aluminium	210	422	2xM25	140-178	216	132	285	12,0	89	38	80	41,0	10	6208-ZZ	6206-ZZ	40*62*10	30*47*7	250	180	215	0	M12

IE3 THREE PHASE ALUMINIUM MOTORS

	Power (kW)	Number of Poles	Motor Type	Housing Type	Main Dimensions			Foot Mounted Motors						Shaft				Bearing		Seal		Flange (FB B14b, B34b)				
					AC	L	O	B	A	H	HD	K	C	D	E	GA	F	Drive Side	Non drive Side	Drive Side	Non drive Side	P	N	M	R	S
C	7,50	2	Q3H112M2DE	Aluminium	210	421	2xM25	140	190	112	265	12,0	70	28	60	31,0	8	6306-ZZ	6206-ZZ	30*47*7	30*47*7	200	130	165	0	M10
	7,50	2	Q3H132S2D	Aluminium	260	481	2xM32	140-178	216	132	328	12,0	89	38	80	41,0	10	6208-ZZ	6208-ZZ	40*62*10	40*62*10	250	180	215	0	M12
	7,50	2	Q3HS132S2D	Aluminium	210	447	2xM25	140-178	216	132	285	12,0	89	38	80	41,0	10	6208-ZZ	6206-ZZ	40*62*10	30*47*7	250	180	215	0	M12
C	11,00	2	Q3H132M2A	Aluminium	260	481	2xM32	140-178	216	132	328	12,0	89	38	80	41,0	10	6208-ZZ	6208-ZZ	40*62*10	40*62*10	250	180	215	0	M12
	11,00	2	Q3H160M2C	Aluminium	305	591	2xM32	210-254	254	160	378	14,5	108	42	110	45,0	12	6309-ZZ	6209-ZZ	45*72*10	45*72*10				0	
	11,00	2	Q3HS160M2D	Aluminium	260	520	2xM32	210-254	254	160	356	14,5	108	42	110	45,0	12	6309-ZZ	6208-ZZ	45*72*10	40*62*10				0	
C	15,00	2	Q3H132M2B	Aluminium	260	539	2xM32	140-178	216	132	328	12,0	89	38	80	41,0	10	6208-ZZ	6208-ZZ	40*62*10	40*62*10	250	180	215	0	M12
	15,00	2	Q3H160M2D	Aluminium	305	591	2xM32	210-254	254	160	378	14,5	108	42	110	45,0	12	6309-ZZ	6209-ZZ	45*72*10	45*72*10	-	-	-	-	-
	18,50	2	Q3H160L2C	Aluminium	305	591	2xM32	210-254	254	160	378	14,5	108	42	110	45,0	12	6309-ZZ	6209-ZZ	45*72*10	45*72*10	-	-	-	-	-
C	22,00	2	Q3H160L2D	Aluminium	305	591	2xM32	210-254	254	160	378	14,5	108	42	110	45,0	12	6309-ZZ	6209-ZZ	45*72*10	45*72*10	-	-	-	-	-
	22,00	2	Q3H180M2A	Aluminium	348	696	2xM40	241-279	279	180	437	14,5	121	48	110	51,5	14	6310-ZZ	6310-ZZ	50*80*10	50*80*10	-	-	-	-	-
	22,00	2	Q3HS180M2B	Aluminium	305	600	2xM32	241-279	279	180	398	14,5	121	48	110	51,5	14	6310-ZZ	6209-ZZ	50*80*10	45*72*10	-	-	-	-	-
C	30,00	2	Q3H180M2B	Aluminium	348	696	2xM40	241-279	279	180	437	14,5	121	48	110	51,5	14	6310-ZZ	6310-ZZ	50*80*10	50*80*10	-	-	-	-	-
	30,00	2	Q3H200L2C	Aluminium	348	706	2xM50	267-305	318	200	457	18,5	133	55	110	59,0	16	6312-ZZ	6310-ZZ	60*90*10	50*80*10	-	-	-	-	-
C	37,00	2	Q3H180L2D	Aluminium	348	696	2xM40	241-279	279	180	437	14,5	121	48	110	51,5	14	6310-ZZ	6310-ZZ	50*80*10	50*80*10	-	-	-	-	-
	37,00	2	Q3H200L2D	Aluminium	348	706	2xM50	267-305	318	200	457	18,5	133	55	110	59,0	16	6312-ZZ	6310-ZZ	60*90*10	50*80*10	-	-	-	-	-
SC	45,00	2	Q3H180L2DE	Aluminium	348	750	2xM40	241-279	279	180	437	14,5	121	48	110	51,5	14	6310-ZZ	6310-ZZ	50*80*10	50*80*10	-	-	-	-	-
C	45,00	2	Q3H200L2DE	Aluminium	348	756	2xM50	267-305	318	200	457	18,5	133	55	110	59,0	16	6312-ZZ	6310-ZZ	60*90*10	50*80*10	-	-	-	-	-
	45,00	2	Q3E225M2B	Aluminium	456	735	2xM50	356	286-311	225	485	18,5	149	55	110	59,0	16	6313-ZZ	6313-ZZ	65*100*13	65*100*13	-	-	-	-	-
	55,00	2	Q3E250M2B	Aluminium	456	787	2xM50	311-349	406	250	530	24,0	168	60	140	64,0	18	6315-ZZ	6313-ZZ	75*112*12	65*100*13	-	-	-	-	-
	4 pole																									
	0,12	4	Q3E63M4A	Aluminium	123	220	1xM20	80	100	63	162	7,0	40	11	23	12,5	4	6201-ZZ	6201-ZZ	12*22*7	12*22*7	120	80	100	0	M6
	0,18	4	Q3E63M4B	Aluminium	123	220	1xM20	80	100	63	162	7,0	40	11	23	12,5	4	6201-ZZ	6201-ZZ	12*22*7	12*22*7	120	80	100	0	M6
C	0,25	4	Q3E63M4C	Aluminium	123	234	1xM20	80	100	63	162	7,0	40	11	23	12,5	4	6201-ZZ	6201-ZZ	12*22*7	12*22*7	120	80	100	0	M6
	0,25	4	Q3E71M4B	Aluminium	138	253	1xM20	90	112	71	180	7,0	45	14	30	16,0	5	6202-ZZ	6202-ZZ	15*24*5	15*24*5	140	95	115	0	M8
	0,37	4	Q3E71M4C	Aluminium	138	253	1xM20	90	112	71	180	7,0	45	14	30	16,0	5	6202-ZZ	6202-ZZ	15*24*5	15*24*5	140	95	115	0	M8
C	0,55	4	Q3E71M4E	Aluminium	138	262	1xM20	90	112	71	180	7,0	45	14	30	16,0	5	6202-ZZ	6202-ZZ	15*24*5	15*24*5	140	95	115	0	M8
	0,55	4	Q3H80M4C	Aluminium	158	268	1xM20	100	125	80	216	10,0	50	19	40	21,5	6	6204-ZZ	6204-ZZ	20*30*7	20*30*7	160	110	130	0	M8
	0,75	4	Q3H80M4D	Aluminium	158	268	1xM20	100	125	80	216	10,0	50	19	40	21,5	6	6204-ZZ	6204-ZZ	20*30*7	20*30*7	160	110	130	0	M8
C	1,10	4	Q3H80M4DE	Aluminium	158	293	1xM20	100	125	80	216	10,0	50	19	40	21,5	6	6204-ZZ	6204-ZZ	20*30*7	20*30*7	160	110	130	0	M8
	1,10	4	Q3HS90S4C	Aluminium	158	303	1xM20	100-125	140	90	226	10,0	56	24	50	27,0	8	6305-ZZ	6204-ZZ	25*40*7	20*30*7	160	110	130	0	M8
	1,10	4	Q3H90L4C	Aluminium	172	344	2xM25	100-125	140	90	236	10,0	56	24	50	27,0	8	6305-ZZ	6205-ZZ	25*40*7	25*40*7	160	110	130	0	M8
	1,50	4	Q3H90L4D	Aluminium	172	379	2xM25	100-125	140	90	236	10,0	56	24	50	27,0	8	6305-ZZ	6205-ZZ	25*40*7	25*40*7	160	110	130	0	M8
C	2,20	4	Q3H90L4DE	Aluminium	172	379	2xM25	100-125	140	90	236	10,0	56	24	50	27,0	8	6305-ZZ	6205-ZZ	25*40*7	25*40*7	160	110	130	0	M8
	2,20	4	Q3H100L4C	Aluminium	191	400	2xM25	140	160	100	243	12,0	63	28	60	31,0	8	6306-ZZ	6205-ZZ	30*47*7	25*40*7	200	130	165	0	M10

IE3 THREE PHASE ALUMINIUM MOTORS

	Power [kW]	Number of Poles	Motor Type	Housing Type	Main Dimensions			Foot Mounted Motors						Shaft				Bearing		Seal		Flange [FB B14b, B34b]				
					AC	L	O	B	A	H	HD	K	C	D	E	GA	F	Drive Side	Non drive Side	Drive Side	Non drive Side	P	N	M	R	S
	2,20	4	Q3HS100L4C	Aluminium	172	384	2xM25	140	160	100	246	12,0	63	28	60	31,0	8	6306-ZZ	6205-ZZ	30*47*7	25*40*7	200	130	165	0	M10
	3,00	4	Q3H100L4D	Aluminium	191	400	2xM25	140	160	100	243	12,0	63	28	60	31,0	8	6306-ZZ	6205-ZZ	30*47*7	25*40*7	200	130	165	0	M10
	4,00	4	Q3H112M4D	Aluminium	210	396	2xM25	140	190	112	265	12,0	70	28	60	31,0	8	6306-ZZ	6206-ZZ	30*47*7	30*47*7	200	130	165	0	M10
C	5,50	4	Q3H112M4E	Aluminium	210	421	2xM25	140	190	112	265	12,0	70	28	60	31,0	8	6306-ZZ	6206-ZZ	30*47*7	30*47*7	200	130	165	0	M10
	5,50	4	Q3H132S4B	Aluminium	260	481	2xM32	140-178	216	132	328	12,0	89	38	80	41,0	10	6208-ZZ	6208-ZZ	40*62*10	40*62*10	250	180	215	0	M12
	5,50	4	Q3HS132S4B	Aluminium	210	447	2xM25	140-178	216	132	285	12,0	89	38	80	41,0	10	6208-ZZ	6206-ZZ	40*62*10	30*47*7	250	180	215	0	M12
	7,50	4	Q3H132M4D	Aluminium	260	481	2xM32	140-178	216	132	328	12,0	89	38	80	41,0	10	6208-ZZ	6208-ZZ	40*62*10	40*62*10	250	180	215	0	M12
C	11,00	4	Q3H132M4E	Aluminium	260	539	2xM32	140-178	216	132	328	12,0	89	38	80	41,0	10	6208-ZZ	6208-ZZ	40*62*10	40*62*10	250	180	215	0	M12
	11,00	4	Q3H160M4C	Aluminium	305	591	2xM32	210-254	254	160	378	14,5	108	42	110	45,0	12	6309-ZZ	6209-ZZ	45*72*10	45*72*10	-	-	-	-	-
	11,00	4	Q3HS160M4C	Aluminium	260	578	2xM32	210-254	254	160	356	14,5	108	42	110	45,0	12	6309-ZZ	6208-ZZ	45*72*10	40*62*10	-	-	-	-	-
	15,00	4	Q3H160L4B	Aluminium	305	591	2xM32	210-254	254	160	378	14,5	108	42	110	45,0	12	6309-ZZ	6209-ZZ	45*72*10	45*72*10	-	-	-	-	-
C	18,50	4	Q3H160L4C	Aluminium	305	591	2xM32	210-254	254	160	378	14,5	108	42	110	45,0	12	6309-ZZ	6209-ZZ	45*72*10	45*72*10	-	-	-	-	-
	18,50	4	Q3H180M4B	Aluminium	348	696	2xM40	241-279	279	180	437	14,5	121	48	110	51,5	14	6310-ZZ	6310-ZZ	50*80*10	50*80*10	-	-	-	-	-
	18,50	4	Q3HS180M4B	Aluminium	305	600	2xM32	241-279	279	180	398	14,5	121	48	110	51,5	14	6310-ZZ	6209-ZZ	50*80*10	45*72*10	-	-	-	-	-
SC	22,00	4	Q3H160L4DE	Aluminium	305	619	2xM32	210-254	254	160	378	14,5	108	42	110	45,0	12	6309-ZZ	6209-ZZ	45*72*10	45*72*10	-	-	-	-	-
	22,00	4	Q3HS180L4B	Aluminium	305	631	2xM32	241-279	279	180	398	14,5	121	48	110	51,5	14	6310-ZZ	6209-ZZ	50*80*10	45*72*10	-	-	-	-	-
	22,00	4	Q3H180L4B	Aluminium	348	696	2xM40	241-279	279	180	437	14,5	121	48	110	51,5	14	6310-ZZ	6310-ZZ	50*80*10	50*80*10	-	-	-	-	-
C	30,00	4	Q3H180L4C	Aluminium	348	696	2xM40	241-279	279	180	437	14,5	121	48	110	51,5	14	6310-ZZ	6310-ZZ	50*80*10	50*80*10	-	-	-	-	-
	30,00	4	Q3H200L4D	Aluminium	348	706	2xM50	267-305	318	200	457	18,5	133	55	110	59,0	16	6312-ZZ	6310-ZZ	60*90*10	50*80*10	-	-	-	-	-
	37,00	4	Q3E225S4B	Aluminium	456	765	2xM50	356	286-311	225	485	18,5	149	60	140	64,0	18	6313-ZZ	6313-ZZ	65*100*13	65*100*13	-	-	-	-	-
	45,00	4	Q3E225M4C	Aluminium	456	765	2xM50	356	286-311	225	485	18,5	149	60	140	64,0	18	6313-ZZ	6313-ZZ	65*100*13	65*100*13	-	-	-	-	-
	55,00	4	Q3E250M4B	Aluminium	456	787	2xM50	311-349	406	250	530	24,0	168	65	140	69,0	18	6315-ZZ	6313-ZZ	75*112*12	65*100*13	-	-	-	-	-
	6 pole																									
	0,12	6	Q3E63M6B	Aluminium	123	234	1xM20	80	100	63	162	7,0	40	11	23	12,5	4	6201-ZZ	6201-ZZ	12*22*7	12*22*7	120	80	100	0	M6
	0,18	6	Q3E71M6A	Aluminium	138	253	1xM20	90	112	71	180	7,0	45	14	30	16,0	5	6202-ZZ	6202-ZZ	15*24*5	15*24*5	140	95	115	0	M8
	0,25	6	Q3E71M6B	Aluminium	138	262	1xM20	90	112	71	180	7,0	45	14	30	16,0	5	6202-ZZ	6202-ZZ	15*24*5	15*24*5	140	95	115	0	M8
	0,37	6	Q3H80M6A	Aluminium	158	268	1xM20	100	125	80	216	10,0	50	19	40	21,5	6	6204-ZZ	6204-ZZ	20*30*7	20*30*7	160	110	130	0	M8
	0,55	6	Q3H80M6B	Aluminium	158	268	1xM20	100	125	80	216	10,0	50	19	40	21,5	6	6204-ZZ	6204-ZZ	20*30*7	20*30*7	160	110	130	0	M8
	0,75	6	Q3H90L6C	Aluminium	172	344	2xM25	100-125	140	90	236	10,0	56	24	50	27,0	8	6305-ZZ	6205-ZZ	25*40*7	25*40*7	160	110	130	0	M8
	1,10	6	Q3H90L6D	Aluminium	172	344	2xM25	100-125	140	90	236	10,0	56	24	50	27,0	8	6305-ZZ	6205-ZZ	25*40*7	25*40*7	160	110	130	0	M8
	1,50	6	Q3HS100L6D	Aluminium	172	384	2xM25	140	160	100	246	12,0	63	28	60	31,0	8	6306-ZZ	6205-ZZ	30*47*7	25*40*7	200	130	165	0	M10
	1,50	6	Q3H100L6D	Aluminium	191	400	2xM25	140	160	100	243	12,0	63	28	60	31,0	8	6306-ZZ	6205-ZZ	30*47*7	25*40*7	200	130	165	0	M10
	2,20	6	Q3HS112M6D	Aluminium	191	399	2xM25	140	190	112	260	12,0	70	28	60	31,0	8	6306-ZZ	6205-ZZ	30*47*7	25*40*7	200	130	165	0	M10

IE3 THREE PHASE ALUMINIUM MOTORS

	Power [kW]	Number of Poles	Motor Type	Housing Type	Main Dimensions			Foot Mounted Motors						Shaft				Bearing		Seal		Flange [FB B14b, B34b]				
					AC	L	O	B	A	H	HD	K	C	D	E	GA	F	Drive Side	Non drive Side	Drive Side	Non drive Side	P	N	M	R	S
	3,00	6	Q3H132S6A	Aluminium	260	481	2xM32	140-178	216	132	328	12,0	89	38	80	41,0	10	6208-ZZ	6208-ZZ	40*62*10	40*62*10	250	180	215	0	M12
	4,00	6	Q3H132M6A	Aluminium	260	481	2xM32	140-178	216	132	328	12,0	89	38	80	41,0	10	6208-ZZ	6208-ZZ	40*62*10	40*62*10	250	180	215	0	M12
	5,50	6	Q3H132M6B	Aluminium	260	481	2xM32	140-178	216	132	328	12,0	89	38	80	41,0	10	6208-ZZ	6208-ZZ	40*62*10	40*62*10	250	180	215	0	M12
	7,50	6	Q3HS160M6C	Aluminium	260	520	2xM32	210-254	254	160	356	14,5	108	42	110	45,0	12	6309-ZZ	6208-ZZ	45*72*10	40*62*10	-	-	-	-	-
	7,50	6	Q3H160M6C	Aluminium	305	591	2xM32	210-254	254	160	378	14,5	108	42	110	45,0	12	6309-ZZ	6209-ZZ	45*72*10	45*72*10	-	-	-	-	-
	11,00	6	Q3H160L6D	Aluminium	305	619	2xM32	210-254	254	160	378	14,5	108	42	110	45,0	12	6309-ZZ	6209-ZZ	45*72*10	45*72*10	-	-	-	-	-
	15,00	6	Q3H180L6B	Aluminium	348	696	2xM40	241-279	279	180	437	14,5	121	48	110	51,5	14	6310-ZZ	6310-ZZ	50*80*10	50*80*10	-	-	-	-	-
C	18,50	6	Q3H180L6C	Aluminium	348	696	2xM40	241-279	279	180	437	14,5	121	48	110	51,5	14	6310-ZZ	6310-ZZ	50*80*10	50*80*10	-	-	-	-	-
	18,50	6	Q3H200L6C	Aluminium	348	706	2xM50	267-305	318	200	457	18,5	133	55	110	59,0	16	6312-ZZ	6310-ZZ	60*90*10	50*80*10	-	-	-	-	-
C	22,00	6	Q3H180L6D	Aluminium	348	750	2xM40	241-279	279	180	437	14,5	121	48	110	51,5	14	6310-ZZ	6310-ZZ	50*80*10	50*80*10	-	-	-	-	-
	22,00	6	Q3H200L6D	Aluminium	348	756	2xM50	267-305	318	200	457	18,5	133	55	110	59,0	16	6312-ZZ	6310-ZZ	60*90*10	50*80*10	-	-	-	-	-
	8 pole																									
	0,12	8	Q3E71M8C	Aluminium	138	253	1xM20	90	112	71	180	7,0	45	14	30	16,0	5	6202-ZZ	6202-ZZ	15*24*5	15*24*5	140	95	115	0	M8
	0,18	8	Q3H80M8C	Aluminium	158	268	1xM20	100	125	80	216	10,0	50	19	40	21,5	6	6204-ZZ	6204-ZZ	20*30*7	20*30*7	160	110	130	0	M8
	0,25	8	Q3H80M8D	Aluminium	158	268	1xM20	100	125	80	216	10,0	50	19	40	21,5	6	6204-ZZ	6204-ZZ	20*30*7	20*30*7	160	110	130	0	M8
	0,37	8	Q3H90L8C	Aluminium	172	344	2xM25	100-125	140	90	236	10,0	56	24	50	27,0	8	6305-ZZ	6205-ZZ	25*40*7	25*40*7	160	110	130	0	M8
	0,55	8	Q3H90L8D	Aluminium	172	344	2xM25	100-125	140	90	236	10,0	56	24	50	27,0	8	6305-ZZ	6205-ZZ	25*40*7	25*40*7	160	110	130	0	M8
	2,20	8	Q3H132M8C	Aluminium	260	481	2xM32	140-178	216	132	328	12,0	89	38	80	41,0	10	6208-ZZ	6208-ZZ	40*62*10	40*62*10	250	180	215	0	M12
	3,00	8	Q3H132M8D	Aluminium	260	481	2xM32	140-178	216	132	328	12,0	89	38	80	41,0	10	6208-ZZ	6208-ZZ	40*62*10	40*62*10	250	180	215	0	M12
	4,00	8	Q3H160M8C	Aluminium	305	591	2xM32	210-254	254	160	378	14,5	108	42	110	45,0	12	6309-ZZ	6209-ZZ	45*72*10	45*72*10	-	-	-	-	-
	5,50	8	Q3H160L8C	Aluminium	305	591	2xM32	210-254	254	160	378	14,5	108	42	110	45,0	12	6309-ZZ	6209-ZZ	45*72*10	45*72*10	-	-	-	-	-
	7,50	8	Q3H160L8D	Aluminium	305	591	2xM32	210-254	254	160	378	14,5	108	42	110	45,0	12	6309-ZZ	6209-ZZ	45*72*10	45*72*10	-	-	-	-	-
	11,00	8	Q3H180L8B	Aluminium	348	696	2xM40	241-279	279	180	437	14,5	121	48	110	51,5	14	6310-ZZ	6310-ZZ	50*80*10	50*80*10	-	-	-	-	-
	11,00	8	Q3H200L8C	Aluminium	348	706	2xM50	267-305	318	200	457	18,5	133	55	110	59,0	16	6312-ZZ	6310-ZZ	60*90*10	50*80*10	-	-	-	-	-
	15,00	8	Q3H200L8D	Aluminium	348	756	2xM50	267-305	318	200	457	18,5	133	55	110	59,0	16	6312-ZZ	6310-ZZ	60*90*10	50*80*10	-	-	-	-	-
	18,50	8	Q3E225M8B	Aluminium	456	765	2xM50	356	286-311	225	485	18,5	149	60	140	64,0	18	6313-ZZ	6313-ZZ	65*100*13	65*100*13	-	-	-	-	-
	22,00	8	Q3E225M8C	Aluminium	456	765	2xM50	356	286-311	225	485	18,5	149	60	140	64,0	18	6313-ZZ	6313-ZZ	65*100*13	65*100*13	-	-	-	-	-

IE3 THREE PHASE N SERIES ALUMINIUM MOTORS

IE3 THREE PHASE N SERIES ALUMINIUM MOTORS

ELECTRICAL CHARACTERISTICS @ 50 Hz

	MOTOR TYPE	HOUSING TYPE	RATED VALUES					STARTING VALUES				Breakdown Torque Ratio	EFFICIENCY *			%Cosφ	Weight (B3)	Sound Pressure Leveld-BA **
			Power		SPEED	CUR-RENT	TORQUE	CURRENT I_A / I_N		TORQUE M_A / M_N			η %					
			kW	HP	rpm	A	Nm	⅄	Δ	⅄	Δ	Mk/ Mn	4/4	3/4	2/4	4/4	kg	
2 poles 3000 rpm																		
230/400V	Q3N80S2C	Aluminium	0,75	1,0	2890	1,8	2,5	7,7		3,4		4,1	80,7	77,6	73,2	0,77	8,2	57
230/400V	Q3N80S2D	Aluminium	1,10	1,5	2880	2,3	3,7	8,2		3,3		4,0	82,7	80,6	77,4	0,82	9,5	58
230/400V	Q3N90S2C	Aluminium	1,50	2,0	2885	3,1	5,0	7,4		2,9		3,5	84,2	82,6	80,5	0,83	12,0	61
230/400V	Q3N90S2D	Aluminium	2,20	3,0	2880	4,6	7,3	5,6		3,4		3,7	85,9	85,7	84,5	0,81	14,0	62
230/400V	Q3N100S2C	Aluminium	3,00	4,0	2913	5,7	9,8	9,8		3,2		4,7	87,1	87,3	85,5	0,88	20,7	65
4 poles 1500 rpm																		
230/400V	Q3N80S4C	Aluminium	0,55+	0,75	1425	1,4	3,8	6,4		3,0		3,4	80,8	80,4	76,8	0,70	8,5	47
230/400V	Q3N80S4D	Aluminium	0,75	1,10	1425	1,9	5,1	6,0		2,9		3,2	82,5	81,5	79,1	0,72	9,8	48
230/400V	Q3N90S4C	Aluminium	1,10	1,50	1433	2,5	7,3	6,9		2,9		3,6	84,1	83,8	82,3	0,77	12,5	45
230/400V	Q3N90L4D	Aluminium	1,50	2,20	1433	3,4	10,0	7,3		3,2		3,9	85,3	85,0	83,5	0,76	15,5	46
230/400V	Q3N100S4C	Aluminium	2,20	3,00	1443	4,8	14,6	8,0		3,2		3,9	86,7	85,8	84,1	0,78	20,1	48
230/400V	Q3N100L4D	Aluminium	3,00	4,00	1445	6,6	19,8	8,0		3,3		3,9	87,7	87,1	84,9	0,76	24,0	51

* Please consult the sales team for electrical data for IE2 motors not covered by the regulation.

* According to IEC 60034-2-1
** The sound pressure measurements are taken 1m away from the motor
** Tolerance +3 dBA

IE3 THREE PHASE N SERIES ALUMINIUM MOTORS

DIMENSION - B3

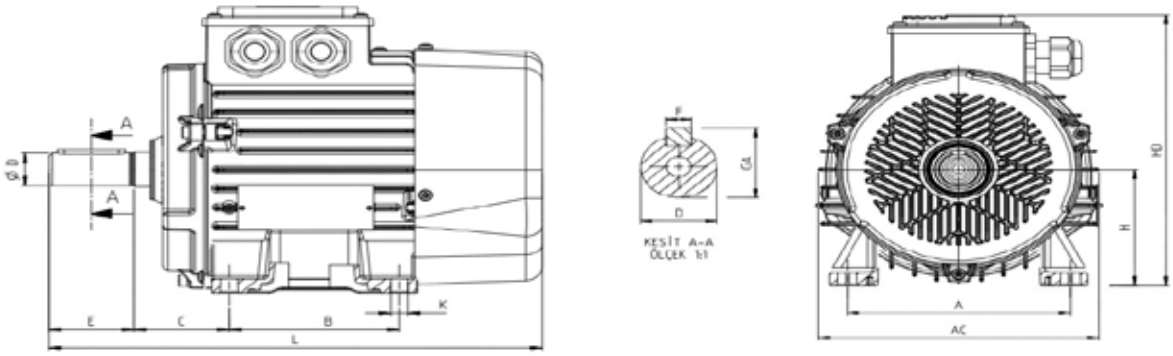

Power (kW)	Number of Poles	Motor Type	Housing Type	Main Dimensions			Foot Mounted Motors						Shaft				Bearing		Seal	
				AC	L	O	B	A	H	HD	K	C	D	E	GA	F	Drive Side	Non drive Side	Drive Side	Non drive Side
0.75	2	Q3N80S2C	Aluminium	156	255.7	M20	100	125	80	187.0	10	50	19	40	21.5	6	6204-ZZ	6204-ZZ	20*30*7	20*30*7
1.10	2	Q3N80S2D	Aluminium	156	270.5	M20	100	125	80	187.0	10	50	19	40	21.5	6	6204-ZZ	6204-ZZ	20*30*7	20*30*7
0.55	4	Q3N80S4C	Aluminium	156	255.7	M20	100	125	80	187.0	10	50	19	40	21.5	6	6204-ZZ	6204-ZZ	20*30*7	20*30*7
0.75	4	Q3N80S4D	Aluminium	156	255.7	M20	100	125	80	187.0	10	50	19	40	21.5	6	6204-ZZ	6204-ZZ	20*30*7	20*30*7
1.50	2	Q3N90S2C40	Aluminium	176	290.0	M25	100	140	90	210.0	10	56	24	50	27.0	8	6205-ZZ	6205-ZZ	25*40*7	25*40*7
2.20	2	Q3N90S2D40	Aluminium	176	290.0	M25	100	140	90	210.0	10	56	24	50	27.0	8	6205-ZZ	6205-ZZ	25*40*7	25*40*7
3.00	2	Q3N100S2C40	Aluminium	196	340.0	M25	140	160	100	230.5	12	63	28	60	31.0	8	6206-ZZ	6206-ZZ	30*47*8	30*47*8
1.10	4	Q3N90S4C40	Aluminium	176	290.0	M25	100	140	90	210.0	10	56	24	50	27.0	8	6205-ZZ	6205-ZZ	25*40*7	25*40*7
1.50	4	Q3N90L4D40	Aluminium	176	320.0	M25	125	140	90	210.0	10	56	24	50	27.0	8	6205-ZZ	6205-ZZ	25*40*7	25*40*7
2.20	4	Q3N100S4C40	Aluminium	196	340.0	M25	140	160	100	230.5	12	63	28	60	31.0	8	6206-ZZ	6206-ZZ	30*47*8	30*47*8
3.00	4	Q3N100L4D40	Aluminium	196	370.0	M25	140	160	100	230.5	12	63	28	60	31.0	8	6206-ZZ	6206-ZZ	30*47*8	30*47*8

IE3 THREE PHASE N SERIES ALUMINIUM MOTORS

DIMENSION - B5, B35

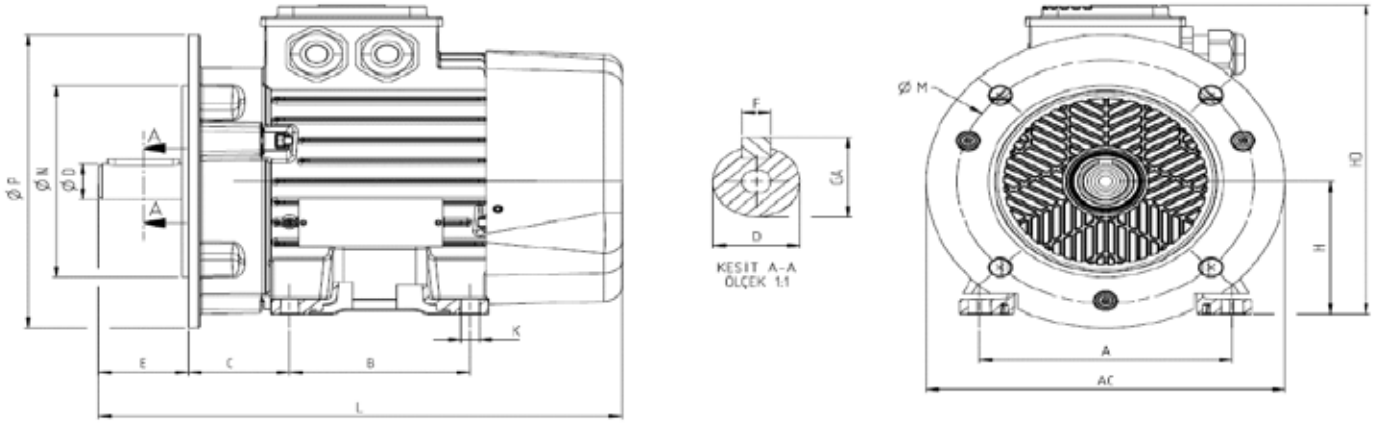

Power (kW)	Number of Poles	Motor Type	Housing Type	Main Dimensions			Foot Mounted Motors						Shaft				Bearing		Seal		Flanş (FA B5, B35)				
				AC	L	O	B	A	H	HD	K	C	D	E	GA	F	Drive Side	Non drive Side	Drive Side	Non drive Side	P	N	M	R	S
0,75	2	Q3NPA80S2C	Aluminium	156,0	255,7	M20	100	125	80	187	10	50	19	40	21,5	6	6204-ZZ	6204-ZZ	20*30*7	20*30*7	198,0	130	165	-	12,0
0,75	2	Q3NFA80S2C	Aluminium	156,0	255,7	M20	-	-	-	-	-	-	19	40	21,5	6	6204-ZZ	6204-ZZ	20*30*7	20*30*7	198,0	130	165	-	12,0
1,10	2	Q3NPA80S2D	Aluminium	156,0	255,7	M20	100	125	80	187	10	50	19	40	21,5	6	6204-ZZ	6204-ZZ	20*30*7	20*30*7	198,0	130	165	-	12,0
1,10	2	Q3NFA80S2D	Aluminium	156,0	255,7	M20	-	-	-	-	-	-	19	40	21,5	6	6204-ZZ	6204-ZZ	20*30*7	20*30*7	198,0	130	165	-	12,0
0,55	4	Q3NPA80S4C	Aluminium	156,0	255,7	M20	100	125	80	187	10	50	19	40	21,5	6	6204-ZZ	6204-ZZ	20*30*7	20*30*7	198,0	130	165	-	12,0
0,55	4	Q3NFA80S4C	Aluminium	156,0	255,7	M20	-	-	-	-	-	-	19	40	21,5	6	6204-ZZ	6204-ZZ	20*30*7	20*30*7	198,0	130	165	-	12,0
0,75	4	Q3NPA80S4D	Aluminium	156,0	255,7	M20	100	125	80	187	10	50	19	40	21,5	6	6204-ZZ	6204-ZZ	20*30*7	20*30*7	198,0	130	165	-	12,0
0,75	4	Q3NFA80S4D	Aluminium	156,0	255,7	M20	-	-	-	-	-	-	19	40	21,5	6	6204-ZZ	6204-ZZ	20*30*7	20*30*7	198,0	130	165	-	12,0
1,50	2	Q3NFA90S2C40	Aluminium	198,9	290,0	M25	-	-	-	-	-	-	24	50	27,0	8	6205-ZZ	6205-ZZ	25*40*7	25*40*7	198,9	130	165	-	12,0
1,50	2	Q3NPA90S2C40	Aluminium	198,9	290,0	M25	100	140	90	210	10	56	24	50	27,0	8	6205-ZZ	6205-ZZ	25*40*7	25*40*7	198,9	130	165	-	12,0
2,20	2	Q3NFA90S2D40	Aluminium	198,9	290,0	M25	-	-	-	-	-	-	24	50	27,0	8	6205-ZZ	6205-ZZ	25*40*7	25*40*7	198,9	130	165	-	12,0
2,20	2	Q3NPA90S2D40	Aluminium	198,9	290,0	M25	100	140	90	210	10	56	24	50	27,0	8	6205-ZZ	6205-ZZ	25*40*7	25*40*7	198,9	130	165	-	12,0
3,00	2	Q3NFA100S2C40	Aluminium	248,9	340,0	M25	-	-	-	-	-	-	28	60	31,0	8	6206-ZZ	6206-ZZ	30*47*8	30*47*8	248,9	180	215	-	14,5
3,00	2	Q3NPA100S2C40	Aluminium	248,9	340,0	M25	140	160	100	230,5	12	63	28	60	31,0	8	6206-ZZ	6206-ZZ	30*47*8	30*47*8	248,9	180	215	-	14,5
2,20	4	Q3NFA90S4C40	Aluminium	248,9	340,0	M25	-	-	-	-	-	-	28	60	31,0	8	6206-ZZ	6206-ZZ	30*47*8	30*47*8	248,9	180	215	-	14,5
2,20	4	Q3NPA100S4C40	Aluminium	248,9	340,0	M25	140	160	100	230,5	12	63	28	60	31,0	8	6206-ZZ	6206-ZZ	30*47*8	30*47*8	248,9	180	215	-	14,5
3,00	4	Q3NFA100L4D40	Aluminium	248,9	370,0	M25	-	-	-	-	-	-	28	60	31,0	8	6206-ZZ	6206-ZZ	30*47*8	30*47*8	248,9	180	215	-	14,5
3,00	4	Q3NPA100L4D40	Aluminium	248,9	370,0	M25	140	160	100	230,5	12	63	28	60	31,0	8	6206-ZZ	6206-ZZ	30*47*8	30*47*8	248,9	180	215	-	14,5

IE3 THREE PHASE N SERIES ALUMINIUM MOTORS

DIMENSION - B14a, B34a

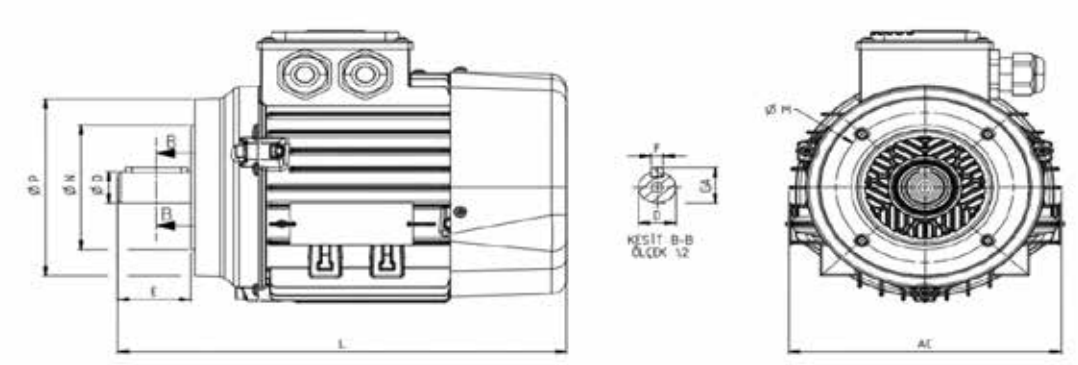

Power (kW)	Number of Poles	Motor Type	Housing Type	Main Dimensions			Foot Mounted Motors						Shaft				Bearing		Seal		Flanş (FC B14a, B34a)				
				AC	L	O	B	A	H	HD	K	C	D	E	GA	F	Drive Side	Non drive Side	Drive Side	Non drive Side	P	N	M	R	S
0,55	4	Q3N80S4C	Aluminium	156	255,7	M20	100	125	80	187,0	10	50	19	40	21,5	6	6204-ZZ	6204-ZZ	20*30*7	20*30*7	116,8	80	100	-	M6
0,75	2	Q3N80S2C	Aluminium	156	255,7	M20	100	125	80	187,0	10	50	19	40	21,5	6	6204-ZZ	6204-ZZ	20*30*7	20*30*7	116,8	80	100	-	M6
0,75	4	Q3N80S4D	Aluminium	156	255,7	M20	100	125	80	187,0	10	50	19	40	21,5	6	6204-ZZ	6204-ZZ	20*30*7	20*30*7	116,8	80	100	-	M6
1,10	2	Q3N80S2D	Aluminium	156	255,7	M20	100	125	80	187,0	10	50	19	40	21,5	6	6204-ZZ	6204-ZZ	20*30*7	20*30*7	116,8	80	100	-	M6
1,10	4	Q3N90S4C	Aluminium	176	290,0	M25	100	140	90	210,0	10	56	24	50	27,0	8	6205-ZZ	6205-ZZ	25*40*7	25*40*7	135,0	95	115	-	M8
1,50	2	Q3N90S2C	Aluminium	176	290,0	M25	100	140	90	210,0	10	56	24	50	27,0	8	6205-ZZ	6205-ZZ	25*40*7	25*40*7	135,0	95	115	-	M8
1,50	4	Q3N90L4D	Aluminium	176	320,0	M25	125	140	90	210,0	10	56	24	50	27,0	8	6205-ZZ	6205-ZZ	25*40*7	25*40*7	135,0	95	115	-	M8
2,20	2	Q3N90S2D	Aluminium	176	290,0	M25	100	140	90	210,0	10	56	24	50	27,0	8	6205-ZZ	6205-ZZ	25*40*7	25*40*7	135,0	95	115	-	M8
2,20	4	Q3N100S4C	Aluminium	196	340,0	M25	140	160	100	230,5	12	63	28	60	31,0	8	6206-ZZ	6206-ZZ	30*47*8	30*47*8	155,0	110	130	-	M8
3,00	2	Q3N100S2C	Aluminium	196	340,0	M25	140	160	100	230,5	12	63	28	60	31,0	8	6206-ZZ	6206-ZZ	30*47*8	30*47*8	155,0	110	130	-	M8
3,00	4	Q3N100L4D	Aluminium	196	370,0	M25	140	160	100	230,5	12	63	28	60	31,0	8	6206-ZZ	6206-ZZ	30*47*8	30*47*8	155,0	110	130	-	M8

IE3 THREE PHASE N SERIES ALUMINIUM MOTORS

DIMENSION - B14b, B34b

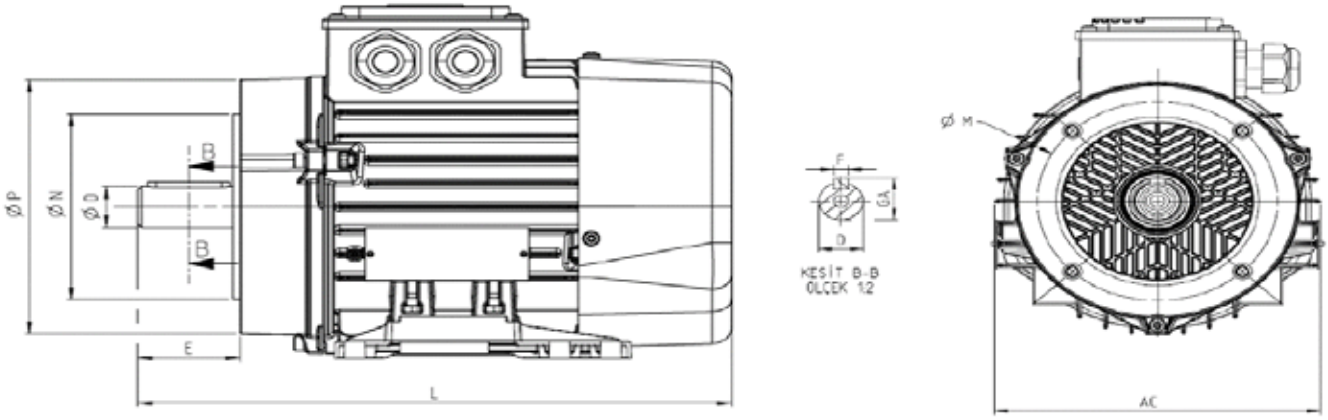

Power (kW)	Number of Poles	Motor Type	Housing Type	Main Dimensions			Foot Mounted Motors						Shaft				Bearing		Seal		Flanş (FB B14b, B34b)				
				AC	L	O	B	A	H	HD	K	C	D	E	GA	F	Drive Side	Non drive Side	Drive Side	Non drive Side	P	N	M	R	S
1,1	4	Q3N90S4C40	Aluminium	176	290	M25	100	140	90	210	10	56	24	50	27	8	6205-ZZ	6205-ZZ	25*40*7	25*40*7	150,4	110	130	-	M8
1,5	2	Q3N90S2C40	Aluminium	176	290	M25	100	140	90	210	10	56	24	50	27	8	6205-ZZ	6205-ZZ	25*40*7	25*40*7	150,4	110	130	-	M8
1,5	4	Q3N90L4D40	Aluminium	176	320	M25	125	140	90	210	10	56	24	50	27	8	6205-ZZ	6205-ZZ	25*40*7	25*40*7	150,4	110	130	-	M8
2,2	2	Q3N90S2D40	Aluminium	176	290	M25	100	140	90	210	10	56	24	50	27	8	6205-ZZ	6205-ZZ	25*40*7	25*40*7	150,4	110	130	-	M8

IE2 THREE PHASE ALUMINIUM MOTORS

IE2 THREE PHASE ALUMINIUM MOTORS

ELECTRICAL CHARACTERISTICS @ 50 Hz

		MOTOR TYPE	HOUSING TYPE	RATED VALUES					STARTING VALUES				Breakdown Torque Ratio	EFFICIENCY *			Cosφ	J	Weight (B3)	Sound Pressure Level
				Power		SPEED	CURRENT	TORQUE	CURRENT IA / IN		TORQUE MA / MN			η %						
				kW	HP	rpm	A (Δ/Y)	Nm	⅄	Δ	⅄	Δ	Mk/ Mn	4/4	3/4	2/4	4/4	kgm²	kg	dBA**
		2 poles 3000 rpm																		
230/400 V		***Q2E63M2K	Aluminium	0,12	0,17															
		Q2E63M2A	Aluminium	0,18	0,25	3440,00	0,81/0,43	0,50	4,20		2,11		2,91	64,00	68,30	67,0	0,83	0,00022	5,30	61
		Q2E63M2B	Aluminium	0,25	0,30	3450,00	1,4/0,8	0,70	3,91		2,78		3,57	68,00	69,60	65,0	0,75	0,00025	4,50	61
		***Q2E71M2K	Aluminium	0,25	0,30															
	C	Q2E63M2C	Aluminium	0,37	0,50	3490,00	1,55/0,99	1,00	6,40		4,11		5,29	72,00	71,10	55,60	0,74	0,00025	6,10	61
		Q2E71M2A	Aluminium	0,37	0,50	3425,00	1,44/0,83	1,00	4,68		3,00		3,84	72,20	72,80	71,70	0,76	0,00032	6,00	65
	C	Q2E63M2D	Aluminium	0,55	0,75	3450,00	2,1/1,2	1,50	6,20		3,78		4,89	74,00	74,20	70,70	0,80	0,00044	6,70	61
		Q2E71M2B	Aluminium	0,55	0,75	3468,00	2,23/1,29	1,50	5,35		3,78		4,76	74,00	75,20	72,50	0,72	0,00048	7,00	65
		4 poles 1500 rpm																		
230/400 V		Q2E63M4A	Aluminium	0,12	0,17	1375	0,76/0,44	0,8	3,7		3,0		3,0	59,1	58,4	51,3	0,70	0,00022000	4,2	48
		Q2E63M4B	Aluminium	0,18	0,25	1350	0,96/0,55	1,2	3,6		2,3		2,6	64,7	66,3	60,5	0,72	0,00026000	4,8	48
	C	Q2E63M4C	Aluminium	0,25	0,3	1360	1,32/0,76	1,7	4,0		2,8		2,8	68,5	67,4	62,3	0,71	0,00026000	4,8	48
		Q2E71M4A	Aluminium	0,25	0,3	1418	1,24/0,72	1,7	4,2		2,0		2,5	68,5	69,3	64,0	0,73	0,00095000	7,1	52
		Q2E63M4D	Aluminium	0,37	0,5	1353	1,99/1,15	2,6	4,0		3,1		3,0	72,7	72,0	66,8	0,67	0,00022000	5,8	48
		Q2E71M4B	Aluminium	0,37	0,5	1407	1,73/1,00	2,5	4,8		2,4		2,7	72,7	73,5	69,4	0,75	0,001003521	7,5	52
	C	Q2E71M4E	Aluminium	0,55	0,75	1428	2,46/1,42	3,6	5,5		2,8		3,2	77,1	76,8	73,1	0,76	0,00095000	9,2	52
		Q2H80M4B	Aluminium	0,55	0,75	1449	2,4/1,4	3,7	5,4		1,9		2,5	77,1	78,0	74,7	0,74	0,00210000	10,5	53
		6 poles 1000 rpm																		
230/400 V		Q2E63M6B	Aluminium	0,12	0,17	860	1,07/0,62	1,33	2,54		2,30		2,5	50,6	44,4	36,1	0,57	0,000260000	5,4	58
		Q2E71M6B	Aluminium	0,18	0,25	928	1,33/0,77	1,82	3,00		2,43		2,9	56,6	52,5	44,2	0,58	0,000950000	5,9	62
	C	Q2E71M6C	Aluminium	0,25	0,30	923	1,68/0,97	2,61	3,30		2,60		2,8	61,6	59,8	57,5	0,60	0,000950000	7,2	62
		Q2E71M6D	Aluminium	0,37	0,50	918	2,2/1,35	3,85	3,60		2,80		3,1	67,6	65,2	58,5	0,60	0,0013847460	8,6	62
	C	Q2H80M6A	Aluminium	0,37	0,50	953	2,03/1,17	3,71	4,40		2,10		2,8	67,6	68,7	62,5	0,65	0,0015495140	10,4	64
		Q2H80M6B	Aluminium	0,55	0,75	942	2,78/1,61	5,59	4,10		1,82		2,3	73,1	70,6	65,9	0,70	0,0014013000	11,5	64

ELECTRICAL CHARACTERISTICS @ 60 Hz

		MOTOR TYPE	HOUSING TYPE	RATED VALUES					STARTING VALUES				Break-down Torque Ratio	EFFICIENCY *			Cosφ	J	Weight (B3)	Sound Pressure Level
				Power		SPEED	CURRENT	TORQUE	CURRENT IA / IN		TORQUE MA / MN			η %						
				kW	HP	rpm	A (Δ/Y)	Nm	⅄	Δ	⅄	Δ	Mk/ Mn	4/4	3/4	2/4	4/4	kgm²	kg	dBA**
		2 poles 3600 rpm																		
265/460 V		Q2E63M6B	Aluminium	0,12	0,17	860	1,07/0,62	1,33	2,54		2,30		2,5	50,6	44,4	36,1	0,57	0,000260000	5,4	58
		Q2E71M6B	Aluminium	0,18	0,25	928	1,33/0,77	1,82	3,00		2,43		2,9	56,6	52,5	44,2	0,58	0,000950000	5,9	62
	C	Q2E71M6C	Aluminium	0,25	0,30	923	1,68/0,97	2,61	3,30		2,60		2,8	61,6	59,8	57,5	0,60	0,000950000	7,2	62
		Q2E71M6D	Aluminium	0,37	0,50	918	2,2/1,35	3,85	3,60		2,80		3,1	67,6	65,2	58,5	0,60	0,001384746	8,6	62
	C	Q2H80M6A	Aluminium	0,37	0,50	953	2,03/1,17	3,71	4,40		2,10		2,8	67,6	68,7	62,5	0,65	0,001549514	10,4	64
		Q2H80M6B	Aluminium	0,55	0,75	942	2,78/1,61	5,59	4,10		1,82		2,3	73,1	70,6	65,9	0,70	0,001401300	11,5	64
	C	Q2E63M2D	Aluminium	0,55	0,75	3450,00	2,1/1,2	1,50	6,20		3,78		4,89	74,00	74,20	70,70	0,80	0,001900000	6,70	61
		Q2E71M2B	Aluminium	0,55	0,75	3468,00	2,23/1,29	1,50	5,35		3,78		4,76	74,00	75,20	72,50	0,72	0,002101950	7,00	65
		4 poles 1800 rpm																		
265/460 V		Q2E63M4A	Aluminium	0,12	0,17	1708,00	0,65/0,37	0,68	3,53		4,11		3,97	66,00	65,20	57,90	0,61	0,000220000	4,20	61
		Q2E63M4B	Aluminium	0,18	0,25	1690,00	0,88/0,51	1,02	3,44		4,00		3,44	68,00	71,50	67,90	0,63	0,000260000	4,80	61
	C	Q2E63M4C	Aluminium	0,25	0,30	1690,00	1,2/0,68	1,42	3,82		4,44		3,70	70,00	69,20	65,30	0,65	0,000260000	4,80	61
		Q2E71M4A	Aluminium	0,25	0,30	1733,00	1,1/0,64	1,39	4,01		4,67		3,31	70,00	70,80	68,40	0,67	0,000950000	7,10	65
		Q2E63M4D	Aluminium	0,37	0,50	1666,00	1,8/1	2,14	3,82		4,44		3,97	70,20	65,80	60,30	0,65	0,000220000	5,80	61
		Q2E71M4B	Aluminium	0,37	0,50	1725,00	1,54/0,89	2,06	4,58		5,33		3,57	70,20	70,80	66,50	0,71	0,001003521	7,50	65
	C	Q2E71M4E	Aluminium	0,55	0,75	1730,00	2,4/1,4	3,06	5,25		6,11		4,23	75,50	75,10	71,40	0,75	0,000950000	9,20	65
		Q2H80M4B	Aluminium	0,55	0,75	1756,00	2,18/1,26	3,01	5,15		6,00		3,31	75,50	76,80	75,50	0,69	0,002100000	10,30	67
		6 poles 1200 rpm																		
265/460 V		Q2E63M6B	Aluminium	0,12	0,17	1125,00	1,02/0,59	1,03	2,45		2,56		3,31	50,50	44,30	36,00	0,50	0,000260000	5,40	61
		Q2E71M6B	Aluminium	0,18	0,25	1142,00	1,25/0,72	1,52	2,86		2,70		3,84	55,00	54,20	49,10	0,52	0,000950000	5,90	65
	C	Q2E71M6C	Aluminium	0,25	0,30	1138,00	1,56/0,90	2,11	3,15		2,89		3,70	59,50	58,20	54,10	0,54	0,000950000	6,90	65
		Q2E71M6D	Aluminium	0,37	0,50	1140,00	2,1/1,2	3,12	3,44		3,11		4,10	64,00	62,00	60,00	0,54	0,001368644	8,50	65
	C	Q2H80M6A	Aluminium	0,37	0,50	1163,00	1,85/1,07	3,06	4,20		2,33		3,70	64,00	68,20	61,90	0,59	0,001537349	10,30	67
		Q2H80M6B	Aluminium	0,55	0,75	1153,00	2,48/1,43	4,59	3,91		2,02		3,04	68,00	71,00	67,20	0,64	0,001401300	11,30	67

* According to IEC 60034-2-1
** The sound pressure measurements are taken 1m away from the motor
** Tolerance +3 dBA
*** Please consult with us.

IE2 THREE PHASE ALUMINIUM MOTORS

DIMENSION - B3

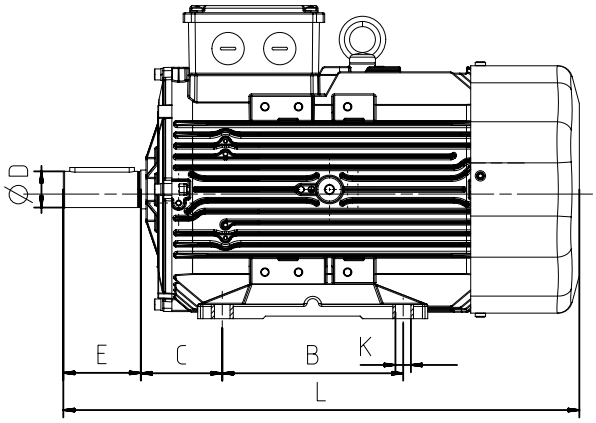

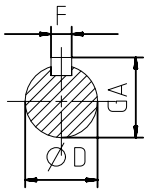

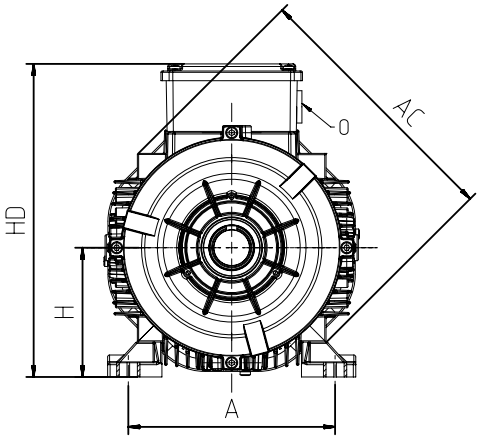

	Power (kW)	Number of Poles	Motor Type	Housing Type	Main Dimensions			Foot Mounted Motors						Shaft				Bearing		Seal	
					AC	L	O	B	A	H	HD	K	C	D	E	GA	F	Drive Side	Non drive Side	Drive Side	Non drive Side
	2 pole																				
	0,12	2	Q2E63M2K	Aluminium	123	220	1xM20	80	100	63	162	7	40	11	23	12,5	4	6201-ZZ	6201-ZZ	12*22*7	12*22*7
	0,18	2	Q2E63M2A	Aluminium	123	220	1xM20	80	100	63	162	7	40	11	23	12,5	4	6201-ZZ	6201-ZZ	12*22*7	12*22*7
	0,25	2	Q2E63M2B	Aluminium	123	220	1xM20	80	100	63	162	7	40	11	23	12,5	4	6201-ZZ	6201-ZZ	12*22*7	12*22*7
	0,25	2	Q2E71M2K	Aluminium	138	253	1xM20	90	112	71	180	7	45	14	30	16,0	5	6202-ZZ	6202-ZZ	15*24*5	15*24*5
C	0,37	2	Q2E63M2C	Aluminium	123	234	1xM20	80	100	63	162	7	40	11	23	12,5	4	6201-ZZ	6201-ZZ	12*22*7	12*22*7
	0,37	2	Q2E71M2A	Aluminium	138	253	1xM20	90	112	71	180	7	45	14	30	16,0	5	6202-ZZ	6202-ZZ	15*24*5	15*24*5
C	0,55	2	Q2E63M2D	Aluminium	123	234	1xM20	80	100	63	162	7	40	11	23	12,5	4	6201-ZZ	6201-ZZ	12*22*7	12*22*7
	0,55	2	Q2E71M2B	Aluminium	138	253	1xM20	90	112	71	180	7	45	14	30	16,0	5	6202-ZZ	6202-ZZ	15*24*5	15*24*5
	4 pole																				
	0,12	4	Q2E63M4A	Aluminium	123	220	1xM20	80	100	63	162	7	40	11	23	12,5	4	6201-ZZ	6201-ZZ	12*22*7	12*22*7
	0,18	4	Q2E63M4B	Aluminium	123	220	1xM20	80	100	63	162	7	40	11	23	12,5	4	6201-ZZ	6201-ZZ	12*22*7	12*22*7
C	0,25	4	Q2E63M4C	Aluminium	123	220	1xM20	80	100	63	162	7	40	11	23	12,5	4	6201-ZZ	6201-ZZ	12*22*7	12*22*7
	0,25	4	Q2E71M4A	Aluminium	138	253	1xM20	90	112	71	180	7	45	14	30	16,0	5	6202-ZZ	6202-ZZ	15*24*5	15*24*5
	0,37	4	Q2E63M4D	Aluminium	123	234	1xM20	80	100	63	162	7	40	11	23	12,5	4	6201-ZZ	6201-ZZ	12*22*7	12*22*7
	0,37	4	Q2E71M4B	Aluminium	138	253	1xM20	90	112	71	180	7	45	14	30	16,0	5	6202-ZZ	6202-ZZ	15*24*5	15*24*5
C	0,55	4	Q2E71M4E	Aluminium	138	262	1xM20	90	112	71	180	7	45	14	30	16,0	5	6202-ZZ	6202-ZZ	15*24*5	15*24*5
	0,55	4	Q2H80M4B	Aluminium	158	268	1xM20	100	125	80	216	10	50	19	40	21,5	6	6204-ZZ	6204-ZZ	20*30*7	20*30*7
	6 pole																				
	0,12	6	Q2E63M6B	Aluminium	123	234	1xM20	80	100	63	162	7	40	11	23	12,5	4	6201-ZZ	6201-ZZ	12*22*7	12*22*7
	0,18	6	Q2E71M6B	Aluminium	138	253	1xM20	90	112	71	180	7	45	14	30	16,0	5	6202-ZZ	6202-ZZ	15*24*5	15*24*5
C	0,25	6	Q2E71M6C	Aluminium	138	253	1xM20	90	112	71	180	7	45	14	30	16,0	5	6202-ZZ	6202-ZZ	15*24*5	15*24*5
	0,37	6	Q2E71M6D	Aluminium	138	262	1xM20	90	112	71	180	7	45	14	30	16,0	5	6202-ZZ	6202-ZZ	15*24*5	15*24*5
C	0,37	6	Q2H80M6A	Aluminium	158	268	1xM20	100	125	80	216	10	50	19	40	21,5	6	6204-ZZ	6204-ZZ	20*30*7	20*30*7
	0,55	6	Q2H80M6B	Aluminium	158	268	1xM20	100	125	80	216	10	50	19	40	21,5	6	6204-ZZ	6204-ZZ	20*30*7	20*30*7

IE2 THREE PHASE ALUMINIUM MOTORS

DIMENSION - B5, B35

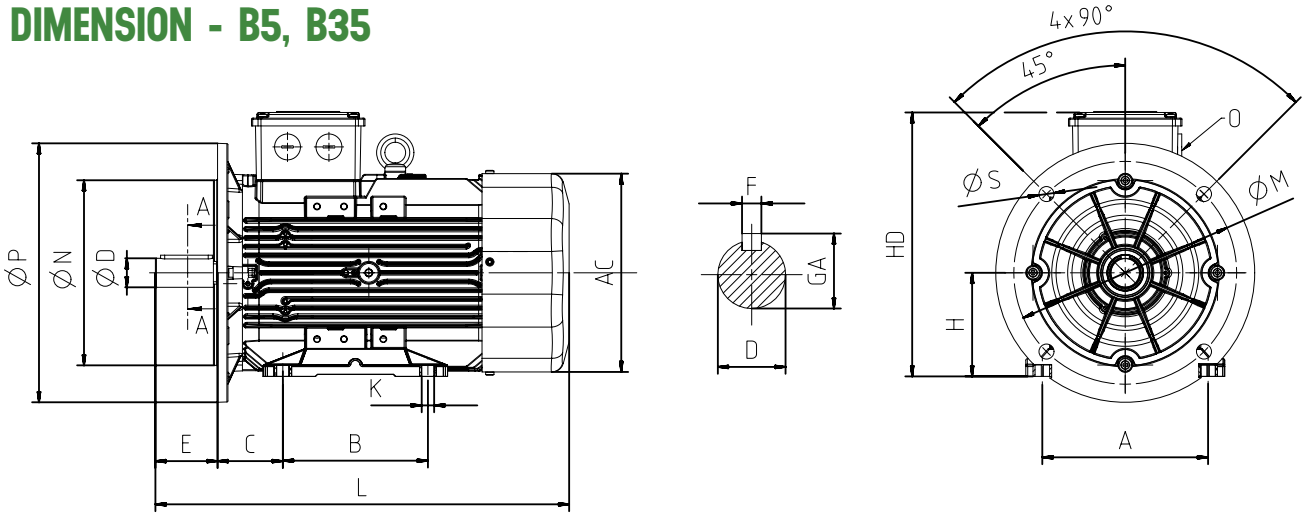

	Power (kW)	Number of Poles	Motor Type	Housing Type	Main Dimensions			Foot Mounted Motors						Shaft				Bearing		Seal		Flange (FA B5, B35)				
					AC	L	O	B	A	H	HD	K	C	D	E	GA	F	Drive Side	Non drive Side	Drive Side	Non drive Side	P	N	M	R	S
	2 pole																									
	0,12	2	Q2E63M2K	Aluminum	123	220	1xM20	80	100	63	162	7	40	11	23	12,5	4	6201-ZZ	6201-ZZ	12*22*7	12*22*7	140	95	115	0	10
	0,18	2	Q2E63M2A	Aluminum	123	220	1xM20	80	100	63	162	7	40	11	23	12,5	4	6201-ZZ	6201-ZZ	12*22*7	12*22*7	140	95	115	0	10
	0,25	2	Q2E63M2B	Aluminum	123	220	1xM20	80	100	63	162	7	40	11	23	12,5	4	6201-ZZ	6201-ZZ	12*22*7	12*22*7	140	95	115	0	10
	0,25	2	Q2E71M2K	Aluminum	138	253	1xM20	90	112	71	180	7	45	14	30	16,0	5	6202-ZZ	6202-ZZ	15*24*5	15*24*5	160	110	130	0	10
C	0,37	2	Q2E63M2C	Aluminum	123	234	1xM20	80	100	63	162	7	40	11	23	12,5	4	6201-ZZ	6201-ZZ	12*22*7	12*22*7	140	95	115	0	10
	0,37	2	Q2E71M2A	Aluminum	138	253	1xM20	90	112	71	180	7	45	14	30	16,0	5	6202-ZZ	6202-ZZ	15*24*5	15*24*5	160	110	130	0	10
C	0,55	2	Q2E63M2D	Aluminum	123	234	1xM20	80	100	63	162	7	40	11	23	12,5	4	6201-ZZ	6201-ZZ	12*22*7	12*22*7	140	95	115	0	10
	0,55	2	Q2E71M2B	Aluminum	138	253	1xM20	90	112	71	180	7	45	14	30	16,0	5	6202-ZZ	6202-ZZ	15*24*5	15*24*5	160	110	130	0	10
	4 pole																									
	0,12	4	Q2E63M4A	Aluminum	123	220	1xM20	80	100	63	162	7	40	11	23	12,5	4	6201-ZZ	6201-ZZ	12*22*7	12*22*7	140	95	115	0	10
	0,18	4	Q2E63M4B	Aluminum	123	220	1xM20	80	100	63	162	7	40	11	23	12,5	4	6201-ZZ	6201-ZZ	12*22*7	12*22*7	140	95	115	0	10
C	0,25	4	Q2E63M4C	Aluminum	123	220	1xM20	80	100	63	162	7	40	11	23	12,5	4	6201-ZZ	6201-ZZ	12*22*7	12*22*7	140	95	115	0	10
	0,25	4	Q2E71M4A	Aluminum	138	253	1xM20	90	112	71	180	7	45	14	30	16,0	5	6202-ZZ	6202-ZZ	15*24*5	15*24*5	160	110	130	0	10
	0,37	4	Q2E63M4D	Aluminum	123	234	1xM20	80	100	63	162	7	40	11	23	12,5	4	6201-ZZ	6201-ZZ	12*22*7	12*22*7	140	95	115	0	10
	0,37	4	Q2E71M4B	Aluminum	138	253	1xM20	90	112	71	180	7	45	14	30	16,0	5	6202-ZZ	6202-ZZ	15*24*5	15*24*5	160	110	130	0	10
C	0,55	4	Q2E71M4E	Aluminum	138	262	1xM20	90	112	71	180	7	45	14	30	16,0	5	6202-ZZ	6202-ZZ	15*24*5	15*24*5	160	110	130	0	10
	0,55	4	Q2H80M4B	Aluminum	158	268	1xM20	100	125	80	216	10	50	19	40	21,5	6	6204-ZZ	6204-ZZ	20*30*7	20*30*7	200	130	165	0	12
	6 pole																									
	0,12	6	Q2E63M6B	Aluminum	123	234	1xM20	80	100	63	162	7	40	11	23	12,5	4	6201-ZZ	6201-ZZ	12*22*7	12*22*7	140	95	115	0	10
	0,18	6	Q2E71M6B	Aluminum	138	253	1xM20	90	112	71	180	7	45	14	30	16,0	5	6202-ZZ	6202-ZZ	15*24*5	15*24*5	160	110	130	0	10
C	0,25	6	Q2E71M6C	Aluminum	138	253	1xM20	90	112	71	180	7	45	14	30	16,0	5	6202-ZZ	6202-ZZ	15*24*5	15*24*5	160	110	130	0	10
	0,37	6	Q2E71M6D	Aluminum	138	262	1xM20	90	112	71	180	7	45	14	30	16,0	5	6202-ZZ	6202-ZZ	15*24*5	15*24*5	160	110	130	0	10
C	0,37	6	Q2H80M6A	Aluminum	158	268	1xM20	100	125	80	216	10	50	19	40	21,5	6	6204-ZZ	6204-ZZ	20*30*7	20*30*7	200	130	165	0	12
	0,55	6	Q2H80M6B	Aluminum	158	268	1xM20	100	125	80	216	10	50	19	40	21,5	6	6204-ZZ	6204-ZZ	20*30*7	20*30*7	200	130	165	0	12

IE2 THREE PHASE ALUMINIUM MOTORS

DIMENSION - B14a, B34a

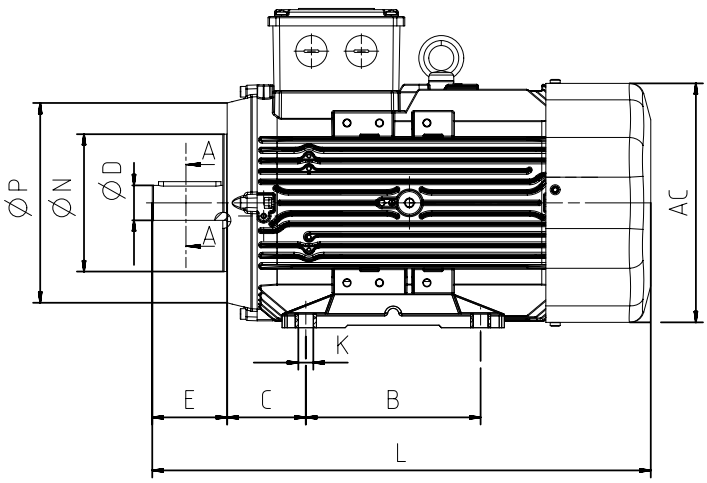

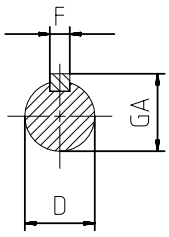

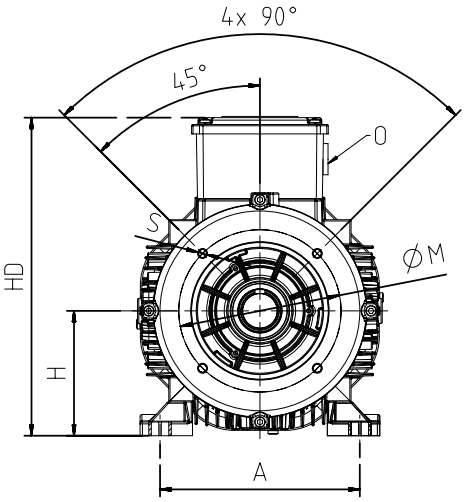

	Power [kW]	Number of Poles	Motor Type	Housing Type	Main Dimensions			Foot Mounted Motors						Shaft				Bearing		Seal		Flange (FC B14a, B34a)				
					AC	L	O	B	A	H	HD	K	C	D	E	GA	F	Drive Side	Non drive Side	Drive Side	Non drive Side	P	N	M	R	S
2 pole																										
	0,12	2	Q2E63M2K	Aluminium	123	220	1xM20	80	100	63	162	7	40	11	23	12,5	4	6201-ZZ	6201-ZZ	12*22*7	12*22*7	90	60	75	0	M5
	0,18	2	Q2E63M2A	Aluminium	123	220	1xM20	80	100	63	162	7	40	11	23	12,5	4	6201-ZZ	6201-ZZ	12*22*7	12*22*7	90	60	75	0	M5
	0,25	2	Q2E63M2B	Aluminium	123	220	1xM20	80	100	63	162	7	40	11	23	12,5	4	6201-ZZ	6201-ZZ	12*22*7	12*22*7	90	60	75	0	M5
	0,25	2	Q2E71M2K	Aluminium	138	253	1xM20	90	112	71	180	7	45	14	30	16,0	5	6202-ZZ	6202-ZZ	15*24*5	15*24*5	105	70	85	0	M6
C	0,37	2	Q2E63M2C	Aluminium	123	234	1xM20	80	100	63	162	7	40	11	23	12,5	4	6201-ZZ	6201-ZZ	12*22*7	12*22*7	90	60	75	0	M5
	0,37	2	Q2E71M2A	Aluminium	138	253	1xM20	90	112	71	180	7	45	14	30	16,0	5	6202-ZZ	6202-ZZ	15*24*5	15*24*5	105	70	85	0	M6
C	0,55	2	Q2E63M2D	Aluminium	123	234	1xM20	80	100	63	162	7	40	11	23	12,5	4	6201-ZZ	6201-ZZ	12*22*7	12*22*7	90	60	75	0	M5
	0,55	2	Q2E71M2B	Aluminium	138	253	1xM20	90	112	71	180	7	45	14	30	16,0	5	6202-ZZ	6202-ZZ	15*24*5	15*24*5	105	70	85	0	M6
4 pole																										
	0,12	4	Q2E63M4A	Aluminium	123	220	1xM20	80	100	63	162	7	40	11	23	12,5	4	6201-ZZ	6201-ZZ	12*22*7	12*22*7	90	60	75	0	M5
	0,18	4	Q2E63M4B	Aluminium	123	220	1xM20	80	100	63	162	7	40	11	23	12,5	4	6201-ZZ	6201-ZZ	12*22*7	12*22*7	90	60	75	0	M5
C	0,25	4	Q2E63M4C	Aluminium	123	220	1xM20	80	100	63	162	7	40	11	23	12,5	4	6201-ZZ	6201-ZZ	12*22*7	12*22*7	90	60	75	0	M5
	0,25	4	Q2E71M4A	Aluminium	138	253	1xM20	90	112	71	180	7	45	14	30	16,0	5	6202-ZZ	6202-ZZ	15*24*5	15*24*5	105	70	85	0	M6
	0,37	4	Q2E63M4D	Aluminium	123	234	1xM20	80	100	63	162	7	40	11	23	12,5	4	6201-ZZ	6201-ZZ	12*22*7	12*22*7	90	60	75	0	M5
	0,37	4	Q2E71M4B	Aluminium	138	253	1xM20	90	112	71	180	7	45	14	30	16,0	5	6202-ZZ	6202-ZZ	15*24*5	15*24*5	105	70	85	0	M6
C	0,55	4	Q2E71M4E	Aluminium	138	262	1xM20	90	112	71	180	7	45	14	30	16,0	5	6202-ZZ	6202-ZZ	15*24*5	15*24*5	105	70	85	0	M6
	0,55	4	Q2H80M4B	Aluminium	158	268	1xM20	100	125	80	216	10	50	19	40	21,5	6	6204-ZZ	6204-ZZ	20*30*7	20*30*7	120	80	100	0	M6
6 pole																										
	0,12	6	Q2E63M6B	Aluminium	123	234	1xM20	80	100	63	162	7	40	11	23	12,5	4	6201-ZZ	6201-ZZ	12*22*7	12*22*7	90	60	75	0	M5
	0,18	6	Q2E71M6B	Aluminium	138	253	1xM20	90	112	71	180	7	45	14	30	16,0	5	6202-ZZ	6202-ZZ	15*24*5	15*24*5	105	70	85	0	M6
C	0,25	6	Q2E71M6C	Aluminium	138	253	1xM20	90	112	71	180	7	45	14	30	16,0	5	6202-ZZ	6202-ZZ	15*24*5	15*24*5	105	70	85	0	M6
	0,37	6	Q2E71M6D	Aluminium	138	262	1xM20	90	112	71	180	7	45	14	30	16,0	5	6202-ZZ	6202-ZZ	15*24*5	15*24*5	105	70	85	0	M6
C	0,37	6	Q2H80M6A	Aluminium	158	268	1xM20	100	125	80	216	10	50	19	40	21,5	6	6204-ZZ	6204-ZZ	20*30*7	20*30*7	120	80	100	0	M6
	0,55	6	Q2H80M6B	Aluminium	158	268	1xM20	100	125	80	216	10	50	19	40	21,5	6	6204-ZZ	6204-ZZ	20*30*7	20*30*7	120	80	100	0	M6

IE2 THREE PHASE ALUMINIUM MOTORS

DIMENSION - B14b, B34b

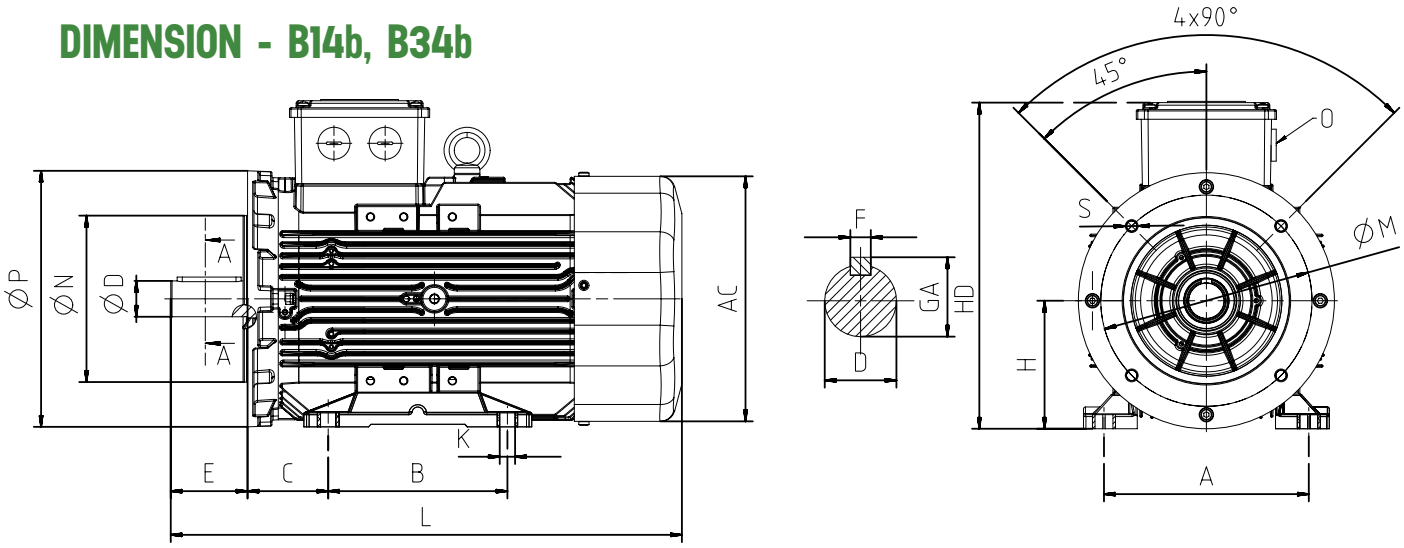

	Power [kW]	Number of Poles	Motor Type	Housing Type	Main Dimensions			Foot Mounted Motors						Shaft				Bearing		Seal		Flange [FB B14b, B34b]				
					AC	L	O	B	A	H	HD	K	C	D	E	GA	F	Drive Side	Non drive Side	Drive Side	Non drive Side	P	N	M	R	S
	2 pole																									
	0,12	2	Q2E63M2K	Aluminum	123	220	1xM20	80	100	63	162	7	40	11	23	12,5	4	6201-ZZ	6201-ZZ	12*22*7	12*22*7	120	80	100	0	M6
	0,18	2	Q2E63M2A	Aluminum	123	220	1xM20	80	100	63	162	7	40	11	23	12,5	4	6201-ZZ	6201-ZZ	12*22*7	12*22*7	120	80	100	0	M6
	0,25	2	Q2E63M2B	Aluminum	123	220	1xM20	80	100	63	162	7	40	11	23	12,5	4	6201-ZZ	6201-ZZ	12*22*7	12*22*7	120	80	100	0	M6
	0,25	2	Q2E71M2K	Aluminum	138	253	1xM20	90	112	71	180	7	45	14	30	16,0	5	6202-ZZ	6202-ZZ	15*24*5	15*24*5	140	95	115	0	M8
C	0,37	2	Q2E63M2C	Aluminum	123	234	1xM20	80	100	63	162	7	40	11	23	12,5	4	6201-ZZ	6201-ZZ	12*22*7	12*22*7	120	80	100	0	M6
	0,37	2	Q2E71M2A	Aluminum	138	253	1xM20	90	112	71	180	7	45	14	30	16,0	5	6202-ZZ	6202-ZZ	15*24*5	15*24*5	140	95	115	0	M8
C	0,55	2	Q2E63M2D	Aluminum	123	234	1xM20	80	100	63	162	7	40	11	23	12,5	4	6201-ZZ	6201-ZZ	12*22*7	12*22*7	120	80	100	0	M6
	0,55	2	Q2E71M2B	Aluminum	138	253	1xM20	90	112	71	180	7	45	14	30	16,0	5	6202-ZZ	6202-ZZ	15*24*5	15*24*5	140	95	115	0	M8
	4 pole																									
	0,12	4	Q2E63M4A	Aluminum	123	220	1xM20	80	100	63	162	7	40	11	23	12,5	4	6201-ZZ	6201-ZZ	12*22*7	12*22*7	120	80	100	0	M6
	0,18	4	Q2E63M4B	Aluminum	123	220	1xM20	80	100	63	162	7	40	11	23	12,5	4	6201-ZZ	6201-ZZ	12*22*7	12*22*7	120	80	100	0	M6
C	0,25	4	Q2E63M4C	Aluminum	123	220	1xM20	80	100	63	162	7	40	11	23	12,5	4	6201-ZZ	6201-ZZ	12*22*7	12*22*7	120	80	100	0	M6
	0,25	4	Q2E71M4A	Aluminum	138	253	1xM20	90	112	71	180	7	45	14	30	16,0	5	6202-ZZ	6202-ZZ	15*24*5	15*24*5	140	95	115	0	M8
	0,37	4	Q2E63M4D	Aluminum	123	234	1xM20	80	100	63	162	7	40	11	23	12,5	4	6201-ZZ	6201-ZZ	12*22*7	12*22*7	120	80	100	0	M6
	0,37	4	Q2E71M4B	Aluminum	138	253	1xM20	90	112	71	180	7	45	14	30	16,0	5	6202-ZZ	6202-ZZ	15*24*5	15*24*5	140	95	115	0	M8
C	0,55	4	Q2E71M4E	Aluminum	138	262	1xM20	90	112	71	180	7	45	14	30	16,0	5	6202-ZZ	6202-ZZ	15*24*5	15*24*5	140	95	115	0	M8
	0,55	4	Q2H80M4B	Aluminum	158	268	1xM20	100	125	80	216	10	50	19	40	21,5	6	6204-ZZ	6204-ZZ	20*30*7	20*30*7	160	110	130	0	M8
	6 pole																									
	0,12	6	Q2E63M6B	Aluminum	123	234	1xM20	80	100	63	162	7	40	11	23	12,5	4	6201-ZZ	6201-ZZ	12*22*7	12*22*7	120	80	100	0	M6
	0,18	6	Q2E71M6B	Aluminum	138	253	1xM20	90	112	71	180	7	45	14	30	16,0	5	6202-ZZ	6202-ZZ	15*24*5	15*24*5	140	95	115	0	M8
C	0,25	6	Q2E71M6C	Aluminum	138	253	1xM20	90	112	71	180	7	45	14	30	16,0	5	6202-ZZ	6202-ZZ	15*24*5	15*24*5	140	95	115	0	M8
	0,37	6	Q2E71M6D	Aluminum	138	262	1xM20	90	112	71	180	7	45	14	30	16,0	5	6202-ZZ	6202-ZZ	15*24*5	15*24*5	140	95	115	0	M8
C	0,37	6	Q2H80M6A	Aluminum	158	268	1xM20	100	125	80	216	10	50	19	40	21,5	6	6204-ZZ	6204-ZZ	20*30*7	20*30*7	160	110	130	0	M8
	0,55	6	Q2H80M6B	Aluminum	158	268	1xM20	100	125	80	216	10	50	19	40	21,5	6	6204-ZZ	6204-ZZ	20*30*7	20*30*7	160	110	130	0	M8

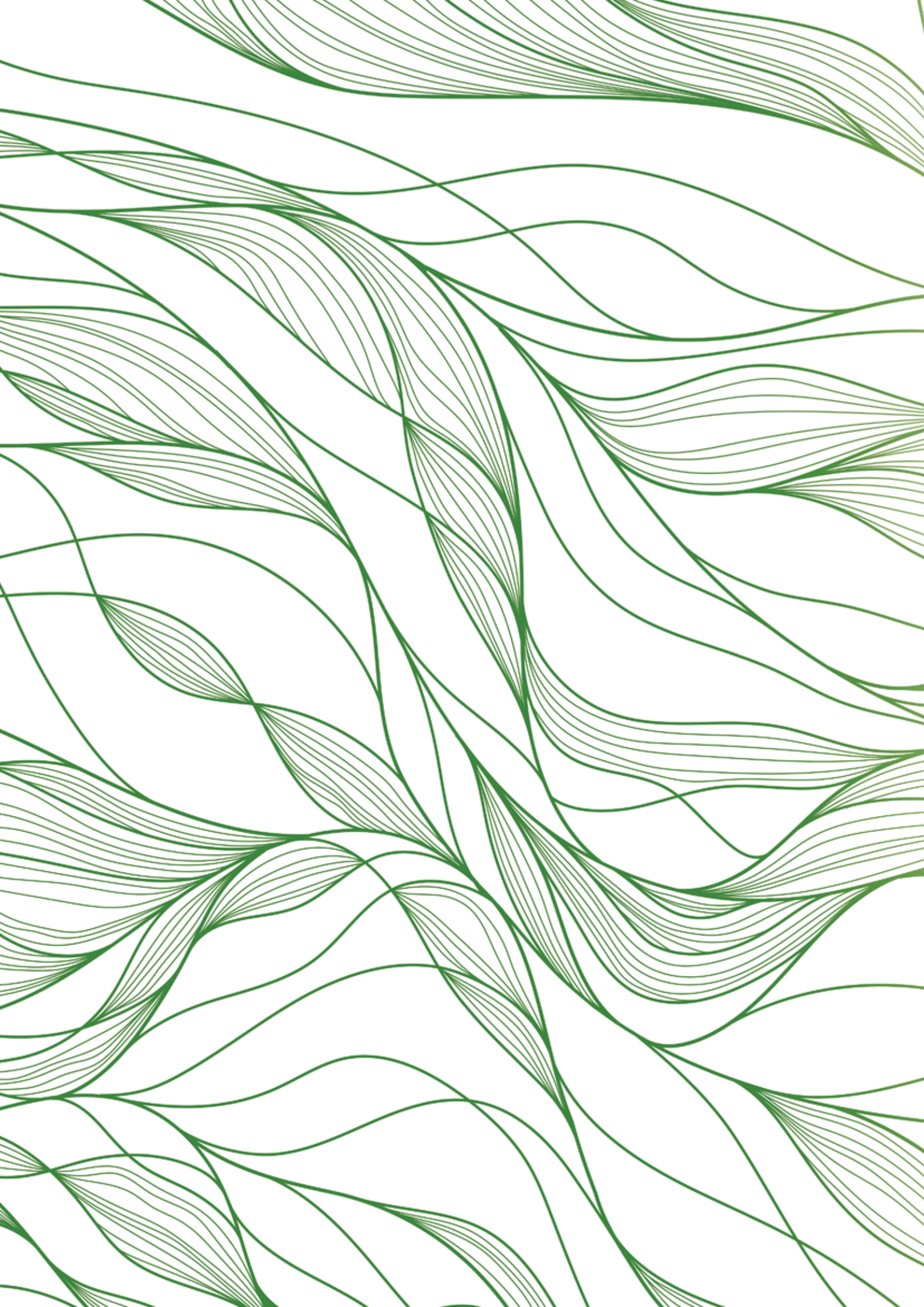

THREE PHASE CAST IRON MOTORS

IE3 THREE PHASE CAST IRON MOTORS

ELECTRICAL CHARACTERISTICS @ 50 Hz

	MOTOR TiPi	HOUSING TYPE	RATED VALUES					STARTING VALUES				Breakdown Torque Ratio	EFFICIENCY *			% Cosφ	J	Weight (B3)	Sound Pressure LeveldBA **
			Power		SPEED	CURRENT	TORQUE	CURRENT I_A / I_N		TORQUE M_A / M_N			η %						
			kW	HP	rpm	A	Nm	⅄	Δ	⅄	Δ	Mk/ Mn	4/4	3/4	2/4	4/4	kgm²	kg	
2 pole 3000 rpm																			
230/400V	Q3HG80M2C	Cast Iron	0.75	1	2890	1.6	2.5	8.2	-	3.3	-	4.0	80.7	79.5	75.8	0.82	0.00140	19	57
230/400V	Q3HG80M2D	Cast Iron	1.10	1.5	2900	2.4	3.6	7.4	-	3.5	-	4.3	82.7	80.2	76.4	0.81	0.00170	22	57
230/400V	Q3HG90L2C	Cast Iron	1.50	2	2930	3.1	4.9	9.5	-	3.0	-	4.9	84.2	86.2	84.2	0.84	0.00249	26	62
230/400V	Q3HG90L2D	Cast Iron	2.20	3	2917	4.3	7.2	9.2	-	3.1	-	4.9	85.9	86.4	85.2	0.87	0.00283	30	62
230/400V	Q3HG100L2D	Cast Iron	3.00	4	2925	5.5	9.8	11.8	-	3.8	-	4.6	87.1	87.1	85.4	0.90	0.00536	39	63
400/690V	Q3HG112M2C	Cast Iron	4.00	5.5	2916	7.4	13.2	-	10.7	-	3.44	4.3	88.10	88.40	87.10	0.90	0.00604	52	67
400/690V	Q3HSG112M2C	Cast Iron	4.00	5.5	2950	7.7	12.7	-	13.6	-	4.9	5.8	88.10	87.00	84.40	0.86	0.00638	45	68
400/690V	Q3HSG132S2C	Cast Iron	5.50	7.5	2918	10	18.0	-	11.6	-	4.2	5.4	89.20	88.30	86.70	0.90	0.00772	56	69
400/690V	Q3HSG132S2D	Cast Iron	7.50	10	2903	13.5	24.7	-	11.0	-	4.2	5.2	90.10	89.80	88.90	0.90	0.00932	63	69
400/690V	Q3HG160M2C	Cast Iron	11.00	15	2965	20.1	35.4	-	11.4	-	3.4	5.1	91.20	91.80	90.40	0.86	0.03957	84	70
400/690V	Q3HSG160M2D	Cast Iron	11.00	15	2940	20.8	35.8	-	11.8	-	4.8	6.5	91.20	90.70	89.30	0.82	0.03517	99	70
400/690V	Q3HG160M2D	Cast Iron	15.00	20	2960	26.4	48.4	-	11.1	-	3.3	4.9	91.90	91.50	89.80	0.89	0.04322	108	70
400/690V	Q3HSG160M2DE	Cast Iron	15.00	20	2941	27.5	48.8	-	12.0	-	4.3	5.9	91.90	90.50	89.00	0.86	0.04015	115	71
400/690V	Q3HG160L2C	Cast Iron	18.50	25	2957	32.9	56.7	-	10.6	-	3.4	5.1	92.40	92.80	92.00	0.87	0.04809	132	70
400/690V	Q3HSG180M2B	Cast Iron	22.00	30	2959	39.5	71.0	-	11.8	-	3.7	5.4	92.70	91.90	90.70	0.87	0.05869	155	77
400/690V	Q3HG200L2C	Cast Iron	30.00	40	2964	51.2	97.6	-	10.4	-	2.7	4.1	93.30	92.80	91.60	0.91	0.10277	206	78
400/690V	Q3HG200L2D	Cast Iron	37.00	50	2960	61.6	118.7	-	9.9	-	2.75	4.2	93.70	93.70	93.10	0.92	0.11383	221	78
400/690V	Q3HG225M2B	Cast Iron	45.00	60	2976	77.7	144.4	-	11.4	-	3.2	6.7	94.00	94.40	93.50	0.89	0.23500	314	80
400/690V	Q3HG250M2B	Cast Iron	55.00	75	2968	93.6	177.1	-	8.5	-	2.8	5.0	94.30	93.90	93.30	0.90	0.48700	332	80
400/690V	Q3EP280M2C	Cast Iron	75.00	100	2975	124.9	240.7	-	8.4	-	2.2	4.4	94.70	94.20	93.10	0.92	0.54000	585	82
400/690V	Q3EP280M2D	Cast Iron	90.00	125	2975	150.7	288.9	-	8.6	-	2.4	5.4	95.00	94.70	93.70	0.93	0.64500	596	82
400/690V	Q3HG315S2D	Cast Iron	110.00	150	2989	202.2	351.6	-	11.5	-	2.0	5.4	95.20	93.90	92.30	0.83	2.19900	880	84
400/690V	Q3HG315M2B	Cast Iron	132.00	180	2984	226.2	423.2	-	9.7	-	2.0	4.3	95.40	95.10	94.10	0.87	2.37790	903	84
400/690V	Q3HG315L2A	Cast Iron	160.00	215	2990	302.1	511.6	-	11.2	-	2.6	6.1	95.60	94.50	92.70	0.81	2.62170	958	84
400/690V	Q3HG315L2C	Cast Iron	200.00	270	2983	343.0	640.3	-	10.8	-	2.2	4.7	95.80	95.40	94.50	0.87	2.90860	1013	84
400/690V	Q3EP355M2C	Cast Iron	250.00	280	2983	419.0	800.0	-	7.3	-	1.7	2.5	95.80	95.80	94.70	0.90	3.81300	1612	91
400/690V	Q3EP355L2B	Cast Iron	315.00	353	2984	527.0	1008.0	-	7.3	-	1.8	2.5	95.80	95.70	94.40	0.90	4.52000	1771	91
400/690V	Q3EP355L2C	Cast Iron	355.00	398	2981	594.0	1137.0	-	7.9	-	2.2	2.5	95.80	95.80	95.00	0.90	5.58000	2002	91
4 pole 1500 rpm																			
230/400V	Q3HG80M4C	Cast Iron	0.55	0.75	1453	1.4	3.6	6.6	-	1.6	-	2.0	80.8	79.3	75.2	0.73	0.00170	19	57
230/400V	Q3HG80M4D	Cast Iron	0.75	1	1447	1.8	5.0	6.6	-	2.6	-	3.5	82.5	80.4	77.1	0.74	0.00261	19	52
230/400V	Q3HG90L4C	Cast Iron	1.10	1.5	1445	2.5	7.3	7.7	-	3.4	-	4.0	84.1	83.2	80.6	0.78	0.00464	29	53
230/400V	Q3HG90L4D	Cast Iron	1.50	2	1449	3.5	9.9	8.1	-	3.6	-	4.2	85.3	85.0	82.1	0.76	0.00526	30	53
230/400V	Q3HG100L4C	Cast Iron	2.20	3	1453	4.5	14.4	9.6	-	3.6	-	4.4	86.7	86.3	84	0.8	0.00871	41	56
400/690V	Q3HG112M4D	Cast Iron	4.00	5.5	1459	8.5	26.1	-	9.7	-	4.0	4.7	88.6	87.9	85.7	0.77	0.01383	56	54
400/690V	Q3HG132S4B	Cast Iron	5.50	7.5	1470	10.9	35.6	-	8.6		2.2	3.7	89.6	89.0	87.3	0.81	0.03560	82	61
400/690V	Q3HG132M4D	Cast Iron	7.50	10	1467	14.8	48.8	-	9.1	-	2.3	4.0	90.4	89.8	88.6	0.82	0.04030	87	60
400/690V	Q3HG160M4C	Cast Iron	11.00	15	1475	22.0	71.3	-	7.3	-	2.7	3.1	91.4	91.6	90.7	0.79	0.07542	125	62
400/690V	Q3HSG160M4C	Cast Iron	11.00	15	1470	20.9	71.6	-	9.1	-	2.6	3.9	91.4	91.0	90.1	0.84	0.05940	112	63
400/690V	Q3HG160L4B	Cast Iron	15.00	20	1476	30.8	96.9	-	7.7	-	2.9	3.6	92.1	91.4	90.1	0.77	0.09005	137	62
400/690V	Q3HSG180M4B	Cast Iron	18.50	25	1474	36.8	119.8	-	7.2	-	2.7	3.2	92.6	92.3	91.7	0.79	0.11398	163	67
400/690V	Q3HG180L4B	Cast Iron	22.00	30	1484	42.4	141.4	-	9.3	-	2.8	3.8	93.0	92.6	91.5	0.81	0.18660	205	68
400/690V	Q3HG200L4D	Cast Iron	30.00	40	1475	54.8	195.4	-	8.0	-	2.5	3.1	93.6	94.2	93.9	0.85	0.22166	263	68
400/690V	Q3HG225S4B	Cast Iron	37.00	50	1483	68.5	237.9	-	8.4	-	2.85	3.9	93.9	92.9	91.7	0.84	0.36420	323	71
400/690V	Q3HG225M4C	Cast Iron	45.00	60	1481	82.3	290.1	-	7.8	-	2.6	4.2	94.2	93.8	93.1	0.84	0.43500	355	71
400/690V	Q3HG250M4B	Cast Iron	55.00	75	1477	103.7	357.1	-	7.5	-	2.8	4.0	94.6	94.0	93.4	0.82	0.90782	383	72
400/690V	Q3EP280M4C	Cast Iron	75.00	100	1485	138.9	482.3	-	7.8	-	3.0	3.2	95	94.8	94	0.82	1.06100	638	73
400/690V	Q3EP280M4D	Cast Iron	90.00	125	1485	163.5	578.7	-	7.9	-	3.0	3.2	95.2	95.0	93.9	0.86	1.14760	653	73
400/690V	Q3HG315S4D	Cast Iron	110.00	150	1491	195.3	703.3	-	11.1	-	2.86	4.1	95.4	94.5	93.2	0.85	3.46500	908	83
400/690V	Q3HG315M4B	Cast Iron	132.00	180	1489	223.7	846.6	-	9.1	-	2.3	3.2	95.6	95.6	95.1	0.89	3.96600	995	83
400/690V	Q3HG315L4A	Cast Iron	160.00	215	1489	270.6	1026.2	-	9.5	-	2.5	3.3	95.8	95.8	95.2	0.89	4.88320	1078	83
400/690V	Q3HG315L4B	Cast Iron	200.00	270	1489	345.0	1282.6	-	10.1	-	2.8	3.5	96.0	95.6	94.7	0.88	5.23440	1068	83
400/690V	Q3EP355M4C	Cast Iron	250.00	280	1491	422.0	1601.0	-	7.5	-	1.9	2.4	96.0	96.0	95.5	0.89	9.30600	1692	82
400/690V	Q3EP355L4B	Cast Iron	315.00	353	1491	532.0	2017.0	-	7.5	-	1.9	2.4	96.0	96.0	95.5	0.89	10.06700	1879	82
400/690V	Q3EP355L4C	Cast Iron	355.00	398	1491	600.0	2273.0	-	7.5	-	2.0	2.3	96.0	96.0	95.5	0.89	11.90000	1953	82

* According to IEC 60034-2-1
** The sound pressure measurements are taken 1m away from the motor
** Tolerance +3 dBA

IE3 THREE PHASE CAST IRON MOTORS

DIMENSION - B3

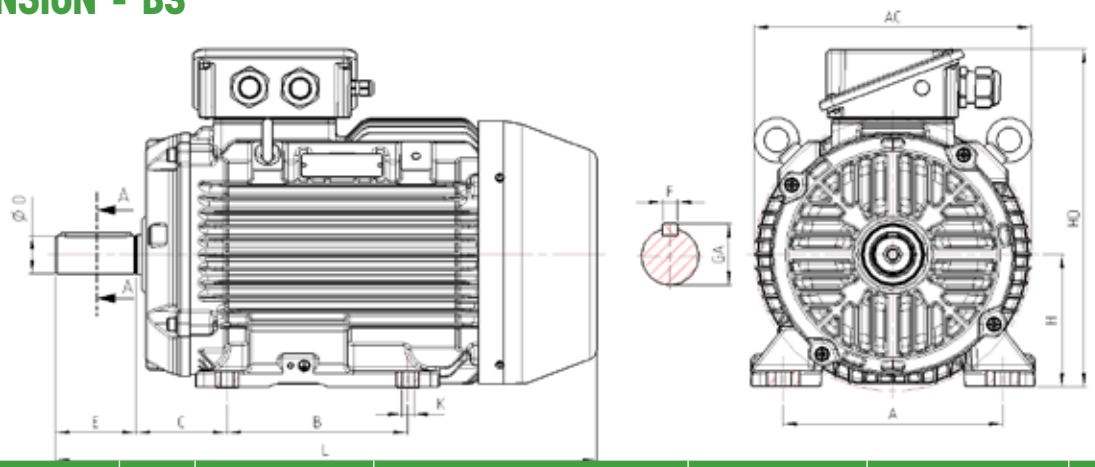

Power (kW)	Number of Poles	Motor Type	Housing Type	Main Dimensions			Foot Mounted Motors						Shaft				Bearing		Seal	
				AC	L	O	B	A	H	HD	K	C	D	E	GA	F	Drive Side	Non drive Side	Drive Side	Non drive Side
2 pole																				
0,75	2	Q3HG80M2C	Cast Iron	175	282	2xM25	100	125	80	225	10,0	50	19	40	21,5	6	6204 ZZ C3	6204 ZZ C3	20*30*7	20*30*7
1,10	2	Q3HG80M2D	Cast Iron	175	317	2xM25	100	125	80	225	10,0	50	19	40	21,5	6	6204 ZZ C3	6204 ZZ C3	20*30*7	20*30*7
1,50	2	Q3HG90L2C	Cast Iron	185	339	2xM25	100	140	90	232	10,0	56	24	50	27,0	8	6305-ZZ C3	6205-ZZ C3	25*40*7	25*40*7
2,20	2	Q3HG90L2D	Cast Iron	185	369	2xM25	125	140	90	232	10,0	56	24	50	27,0	8	6305-ZZ C3	6205-ZZ C3	25*40*7	25*40*7
3,00	2	Q3HG100L2D	Cast Iron	203	416	2xM25	140	160	100	266	12,0	63	28	60	31,0	8	6306-ZZ C3	6306-ZZ C3	30*47*7	30*47*7
4,00	2	Q3HSG112M2C	Cast Iron	205	416	2xM25	140	190	112	283	12,0	70	28	60	31,0	8	6306-ZZ C3	6306-ZZ C3	30*47*7	30*47*7
4,00	2	Q3HG112M2C	Cast Iron	222	434	2xM25	140	190	112	290	12,0	70	28	60	31,0	8	6306-ZZ C3	6306-ZZ C3	30*47*7	30*47*7
5,50	2	Q3HSG132S2C	Cast Iron	222	471	2xM25	140	216	132	311	12,0	89	38	80	41,0	10	6308-ZZ C3	6306-ZZ C3	40*62*10	30*47*7
7,50	2	Q3HSG132S2D	Cast Iron	222	491	2xM25	140	216	132	311	12,0	89	38	80	41,0	10	6308-ZZ C3	6306-ZZ C3	40*62*10	30*47*7
11,00	2	Q3HG160M2C	Cast Iron	328	626	2xM32	210	254	160	387	14,5	108	42	110	45,0	12	6309-ZZ C3	6309-ZZ C3	45*72*10	45*72*10
11,00	2	Q3HSG160M2D	Cast Iron	273	563	2xM32	210	254	160	366	14,5	108	42	110	45,0	12	6309-ZZ C3	6309-ZZ C3	45*72*10	45*72*10
15,00	2	Q3HG160M2D	Cast Iron	328	626	2xM32	210	254	160	387	14,5	108	42	110	45,0	12	6309-ZZ C3	6309-ZZ C3	45*72*10	45*72*10
15,00	2	Q3HSG160M2DE	Cast Iron	273	605	2xM32	210	254	160	366	14,5	108	42	110	45,0	12	6309-ZZ C3	6309-ZZ C3	45*72*10	45*72*10
18,50	2	Q3HG160L2C	Cast Iron	328	626	2xM32	210	254	160	387	14,5	108	42	110	45,0	12	6309-ZZ C3	6309-ZZ C3	45*72*10	45*72*10
22,00	2	Q3HSG180M2B	Cast Iron	328	680	2xM32	241	279	180	407	14,5	121	48	110	51,5	14	6310 ZZ C3	6310 ZZ C3	50*80*10	50*80*10
30,00	2	Q3HG200L2C	Cast Iron	356	763	2xM50	305	318	200	458	18,5	133	55	110	59,0	16	6312-ZZ C3	6310-ZZ C3	60*90*10	50*80*10
37,00	2	Q3HG200L2D	Cast Iron	356	763	2xM50	305	318	200	458	18,5	133	55	110	59,0	16	6312-ZZ C3	6310-ZZ C3	60*90*10	50*80*10
45,00	2	Q3HG225M2B	Cast Iron	440	789	2xM50	311	356	225	524	18,5	149	55	110	59,0	16	6313-ZZ C3	6313-ZZ C3	65*100*13	65*100*13
55,00	2	Q3HG250M2B	Cast Iron	440	818	2xM50	349	406	250	549	24,0	168	60	140	64,0	18	6315-ZZ C3	6313-ZZ C3	75*112*12	75*112*12
75,00	2	Q4HG280M2C	Cast Iron	574	1021	2xM50	368/419	457	280	664	24,0	190	65	140	69,0	18	6314-ZZ C3	6314-ZZ C3	85*110*12 X2	70*90*10 X2
90,00	2	Q4HG280M2D	Cast Iron	574	1021	2xM50	368/419	457	280	664	24,0	190	65	140	69,0	18	6314-ZZ C3	6314-ZZ C3	85*110*12 X2	70*90*10 X2
110,00	2	Q4HG315S2C	Cast Iron	645	1000	2xM63	406	508	315	847	28,0	216	65	140	69,0	18	6316-ZZ C3	6316-ZZ C3	80 VA R	80 VA R
132,00	2	Q4HG315M2B	Cast Iron	645	1070	2xM63	406/457	508	315	847	28,0	216	65	140	69,0	18	6316-ZZ C3	6316-ZZ C3	80 VA R	80 VA R
160,00	2	Q4HG315L2A	Cast Iron	645	1070	2xM63	406/457	508	315	847	28,0	216	65	140	69,0	18	6316-ZZ C3	6316-ZZ C3	80 VA R	80 VA R
200,00	2	Q4HG315L2C	Cast Iron	645	1150	2xM63	457/508	508	315	847	28,0	216	65	140	69,0	18	6316-ZZ C3	6316-ZZ C3	80 VA R	80 VA R
250,00	2	Q3EP355M2C	Cast Iron	762	1512	4xM63	560	610	355	997	28,0	254	75	140	80,0	20	6317	6317	85*105*5,5	85*105*5,5
315,00	2	Q3EP355L2B	Cast Iron	762	1512	4xM63	560/630	610	355	997	28,0	254	75	140	80,0	20	6317	6317	85*105*5,5	85*105*5,5
355,00	2	Q3EP355L2C	Cast Iron	762	1512	4xM63	560/630	610	355	997	28,0	254	75	140	80,0	20	6317	6317	85*105*5,5	85*105*5,5

IE3 THREE PHASE CAST IRON MOTORS

Power (kW)	Number of Poles	Motor Type	Housing Type	Main Dimensions			Foot Mounted Motors						Shaft				Bearing		Seal	
				AC	L	O	B	A	H	HD	K	C	D	E	GA	F	Drive Side	Non drive Side	Drive Side	Non drive Side
4 pole																				
0,55	4	Q3HG80M4C	Cast Iron	175	282	2xM25	100	125	80	225	10,0	50	19	40	21,5	6	6204 ZZ C3	6204 ZZ C3	20*30*7	20*30*7
0,75	4	Q3HG80M4D	Cast Iron	175	282	2xM25	100	125	80	225	10,0	50	19	40	21,5	6	6204 ZZ C3	6204 ZZ C3	20*30*7	20*30*7
1,10	4	Q3HG90L4C	Cast Iron	185	369	2xM25	100	140	90	232	10,0	56	24	50	27,0	8	6305-ZZ C3	6205-ZZ C3	25*40*7	25*40*7
1,50	4	Q3HG90L4D	Cast Iron	185	369	2xM25	125	140	90	232	10,0	56	24	50	27,0	8	6305-ZZ C3	6205-ZZ C3	25*40*7	25*40*7
2,20	4	Q3HG100L4C	Cast Iron	203	416	2xM25	140	160	100	266	12,0	63	28	60	31,0	8	6306-ZZ C3	6306-ZZ C3	30*47*7	30*47*7
3,00	4	Q3HG100L4D	Cast Iron	203	445	2xM25	140	160	100	266	12,0	63	28	60	31,0	8	6306-ZZ C3	6306-ZZ C3	30*47*7	30*47*7
4,00	4	Q3HG112M4D	Cast Iron	222	459	2xM25	140	190	112	290	12,0	70	28	60	31,0	8	6306-ZZ C3	6306-ZZ C3	30*47*7	30*47*7
5,50	4	Q3HG132S4B	Cast Iron	273	533	2xM32	178	216	132	337	12,0	89	38	80	41,0	10	6308-ZZ C3	6308-ZZ C3	40*62*10	40*62*10
7,50	4	Q3HG132M4D	Cast Iron	273	533	2xM32	178	216	132	337	12,0	89	38	80	41,0	10	6308-ZZ C3	6308-ZZ C3	40*62*10	40*62*10
11,00	4	Q3HG160M4C	Cast Iron	328	626	2xM32	210	254	160	387	14,5	108	42	110	45,0	12	6309-ZZ C3	6309-ZZ C3	45*72*10	45*72*10
11,00	4	Q3HSG160M4C	Cast Iron	273	605	2xM32	210	254	160	366	14,5	108	42	110	45,0	12	6309-ZZ C3	6309-ZZ C3	45*72*10	45*72*10
15,00	4	Q3HG160L4B	Cast Iron	328	626	2xM32	210	254	160	387	14,5	108	42	110	45,0	12	6309-ZZ C3	6309-ZZ C3	45*72*10	45*72*10
18,50	4	Q3HSG180M4B	Cast Iron	328	680	2xM32	241	279	180	407	14,5	121	48	110	51,5	14	6310 ZZ C3	6310 ZZ C3	50*80*10	50*80*10
22,00	4	Q3HG180L4B	Cast Iron	356	759	2xM40	279	279	180	441	14,5	121	48	110	51,5	14	6310 ZZ C3	6310 ZZ C3	50*80*10	50*80*10
30,00	4	Q3HG200L4D	Cast Iron	356	816	2xM50	305	318	200	458	18,5	133	55	110	59,0	16	6312-ZZ C3	6310-ZZ C3	60*90*10	50*80*10
37,00	4	Q3HG225S4B	Cast Iron	440	818	2xM50	286	356	225	524	18,5	149	60	140	64,0	18	6313-ZZ C3	6313-ZZ C3	65*100*13	65*100*13
45,00	4	Q3HG225M4C	Cast Iron	440	883	2xM50	311	356	225	524	18,5	149	60	140	64,0	18	6313-ZZ C3	6313-ZZ C3	65*100*13	65*100*13
55,00	4	Q3HG250M4B	Cast Iron	440	883	2xM50	349	406	250	549	24,0	168	65	140	69,0	18	6315-ZZ C3	6313-ZZ C3	65*100*13	65*100*13
75,00	4	Q4HG280M4C	Cast Iron	574	1021	2xM50	368/419	457	280	664	24,0	190	75	140	79,5	20	6317-ZZ C3	6317-ZZ C3	100*120*12 X 2	85*110*12 X 2
90,00	4	Q4HG280M4D	Cast Iron	574	1021	2xM50	368/419	457	280	664	24,0	190	75	140	79,5	20	6317-ZZ C3	6317-ZZ C3	100*120*12 X 2	85*110*12 X 2
110,00	4	Q4HG315S4C	Cast Iron	645	1030	2xM63	406	508	315	847	28,0	216	80	170	85,0	22	6319-ZZ C3	6319-ZZ C3	95 VA R	95 VA R
132,00	4	Q4HG315M4B	Cast Iron	645	1100	2xM63	406/457	508	315	847	28,0	216	80	170	85,0	22	6319-ZZ C3	6319-ZZ C3	95 VA R	95 VA R
160,00	4	Q4HG315L4A	Cast Iron	645	1180	2xM63	457/508	508	315	847	28,0	216	80	170	85,0	22	6319-ZZ C3	6319-ZZ C3	95 VA R	95 VA R
200,00	4	Q4HG315L4C	Cast Iron	645	1180	2xM63	457/508	508	315	847	28,0	216	80	170	85,0	22	6319-ZZ C3	6319-ZZ C3	95 VA R	95 VA R
250,00	4	Q3EP355M4C	Cast Iron	762	1542	4xM63	560	610	355	997	28,0	254	95	170	100,0	25	6322	6322	110*130*5,5	110*130*5,5
315,00	4	Q3EP355L4B	Cast Iron	762	1542	4xM63	560/630	610	355	997	28,0	254	95	170	100,0	25	6322	6322	110*130*5,5	110*130*5,5
355,00	4	Q3EP355L4C	Cast Iron	762	1542	4xM63	560/630	610	355	997	28,0	254	95	170	100,0	25	6322	6322	110*130*5,5	110*130*5,5
6 pole																				
0,37	6	Q3HG80M6A	Cast Iron	175	317	2xM25	100	125	80	225	10,0	50	19	40	21,5	6	6204 ZZ C3	6204 ZZ C3	20*30*7	20*30*7
0,55	6	Q3HG80M6B	Cast Iron	175	317	2xM25	100	125	80	225	10,0	50	19	40	21,5	6	6204 ZZ C3	6204 ZZ C3	20*30*7	20*30*7
0,75	6	Q3HG90L6C	Cast Iron	185	369	2xM25	100	140	90	232	10,0	56	24	50	27,0	8	6305-ZZ C3	6205-ZZ C3	25*40*7	25*40*7
1,10	6	Q3HG90L6D	Cast Iron	185	369	2xM25	125	140	90	232	10,0	56	24	50	27,0	8	6305-ZZ C3	6205-ZZ C3	25*40*7	25*40*7
1,50	6	Q3HG100L6D	Cast Iron	203	445	2xM25	140	160	100	266	12,0	63	28	60	31,0	8	6306-ZZ C3	6306-ZZ C3	30*47*7	30*47*7
2,20	6	Q3HG112M6D	Cast Iron	222	459	2xM25	140	190	112	290	12,0	70	28	60	31,0	8	6306-ZZ C3	6306-ZZ C3	30*47*7	30*47*7
3,00	6	Q3HG132S6A	Cast Iron	273	533	2xM32	140	216	132	337	12,0	89	38	80	41,0	10	6308-ZZ C3	6308-ZZ C3	40*62*10	40*62*10
4,00	6	Q3HG132M6A	Cast Iron	273	533	2xM32	178	216	132	337	12,0	89	38	80	41,0	10	6308-ZZ C3	6308-ZZ C3	40*62*10	40*62*10
5,50	6	Q3HG132M6B	Cast Iron	273	533	2xM32	178	216	132	337	12,0	89	38	80	41,0	10	6308-ZZ C3	6308-ZZ C3	40*62*10	40*62*10
7,50	6	Q3HG160M6C	Cast Iron	328	626	2xM32	210	254	160	387	14,5	108	42	110	45,0	12	6309-ZZ C3	6309-ZZ C3	45*72*10	45*72*10
11,00	6	Q3HG160L6D	Cast Iron	328	668	2xM32	254	254	160	387	14,5	108	42	110	45,0	12	6309-ZZ C3	6309-ZZ C3	45*72*10	45*72*10
15,00	6	Q3HG180L6B	Cast Iron	356	759	2xM40	279	279	180	441	14,5	121	48	110	51,5	14	6310 ZZ C3	6310 ZZ C3	50*80*10	50*80*10
18,50	6	Q3HG200L6C	Cast Iron	356	816	2xM50	305	318	200	458	18,5	133	55	110	59,0	16	6312-ZZ C3	6310-ZZ C3	60*90*10	50*80*10
22,00	6	Q3HG200L6D	Cast Iron	356	816	2xM50	305	318	200	458	18,5	133	55	110	59,0	16	6312-ZZ C3	6310-ZZ C3	60*90*10	50*80*10

IE3 THREE PHASE CAST IRON MOTORS

DIMENSION - B5, B35

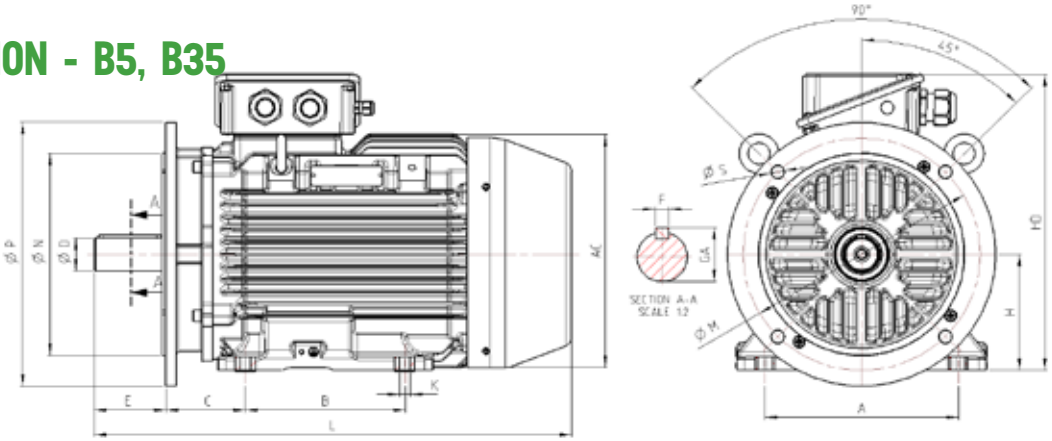

Power (kW)	Number of Poles	Motor Type	Housing Type	Main Dimensions			Foot Mounted Motors						Shaft				Bearing		Seal		Flange (FA B5, B35)				
				AC	L	O	B	A	H	HD	K	C	D	E	GA	F	Drive Side	Non drive Side	Drive Side	Non drive Side	P	N	M	R	S
2 pole																									
0,75	2	Q3HG80M2C	Cast Iron	175	282	2xM25	100	125	80	225	10	50	19	40	21,5	6	6204 ZZ C3	6204 ZZ C3	20*30*7	20*30*7	200	130	165	-	12,0
1,10	2	Q3HG80M2D	Cast Iron	175	317	2xM25	100	125	80	225	10	50	19	40	21,5	6	6204 ZZ C3	6204 ZZ C3	20*30*7	20*30*7	200	130	165	-	12,0
1,50	2	Q3HG90L2C	Cast Iron	185	339	2xM25	125	140	90	232	10	56	24	50	27,0	8	6305-ZZ C3	6205-ZZ C3	25*40*7	25*40*7	200	130	165	-	13,5
2,20	2	Q3HG90L2D	Cast Iron	185	369	2xM25	125	140	90	232	10	56	24	50	27,0	8	6305-ZZ C3	6205-ZZ C3	25*40*7	25*40*7	200	130	165	-	13,5
3,00	2	Q3HG100L2D	Cast Iron	203	416	2xM25	140	160	100	266	12	63	28	60	31,0	8	6306-ZZ C3	6306-ZZ C3	30*47*7	30*47*7	250	180	215	-	14,5
4,00	2	Q3HG112M2C	Cast Iron	222	434	2xM25	140	190	112	290	12	70	28	60	31,0	8	6306-ZZ C3	6306-ZZ C3	30*47*7	30*47*7	250	180	215		14,5
4,00	2	Q3HSG112M2C	Cast Iron	205	416	2xM25	140	190	112	283	12	70	28	60	31,0	8	6306-ZZ C3	6306-ZZ C3	30*47*7	30*47*7	250	180	215	-	14,5
5,50	2	Q3HSG132S2C	Cast Iron	222	471	2xM25	140	216	132	311	12	89	38	80	41,0	10	6308-ZZ C3	6306-ZZ C3	40*62*10	30*47*7	300	230	265	-	14,5
7,50	2	Q3HSG132S2D	Cast Iron	222	491	2xM25	140	216	132	311	12	89	38	80	41,0	10	6308-ZZ C3	6306-ZZ C3	40*62*10	30*47*7	300	230	265	-	14,5
11,00	2	Q3HG160M2C	Cast Iron	328	626	2xM32	210	254	160	387	14,5	108	42	110	45,0	12	6309-ZZ C3	6309-ZZ C3	45*72*10	45*72*10	350	250	300		18,5
11,00	2	Q3HSG160M2D	Cast Iron	273	563	2xM32	210	254	160	366	14,5	108	42	110	45,0	12	6309-ZZ C3	6309-ZZ C3	45*72*10	45*72*10	350	250	300	-	18,5
15,00	2	Q3HG160M2D	Cast Iron	328	626	2xM32	210	254	160	387	14,5	108	42	110	45,0	12	6309-ZZ C3	6309-ZZ C3	45*72*10	45*72*10	350	250	300	-	18,5
15,00	2	Q3HSG160M2DE	Cast Iron	273	605	2xM32	210	254	160	366	14,5	108	42	110	45,0	12	6309-ZZ C3	6309-ZZ C3	45*72*10	45*72*10	350	250	300	-	18,5
18,50	2	Q3HG160L2C	Cast Iron	328	626	2xM32	210	254	160	387	14,5	108	42	110	45,0	12	6309-ZZ C3	6309-ZZ C3	45*72*10	45*72*10	350	250	300	-	18,5
22,00	2	Q3HSG180M2B	Cast Iron	328	680	2xM32	241	279	180	407	14,5	121	48	110	51,5	14	6310-ZZ C3	6310-ZZ C3	50*80*10	50*80*10	350	250	300	-	18,5
30,00	2	Q3HG200L2C	Cast Iron	356	763	2xM50	305	318	200	458	18,5	133	55	110	59,0	16	6312-ZZ C3	6310-ZZ C3	60*90*10	50*80*10	400	300	350	-	18,5
37,00	2	Q3HG200L2D	Cast Iron	356	763	2xM50	305	318	200	458	18,5	133	55	110	59,0	16	6312-ZZ C3	6310-ZZ C3	60*90*10	50*80*10	400	300	350	-	18,5
45,00	2	Q3HG225M2B	Cast Iron	440	789	2xM50	311	356	225	524	18,5	149	55	110	59,0	16	6313-ZZ C3	6313-ZZ C3	65*100*13	65*100*13	450	350	400	-	18,5
55,00	2	Q3HG250M2B	Cast Iron	440	818	2xM50	349	406	250	549	24	168	60	140	64,0	18	6315-ZZ C3	6313-ZZ C3	75*112*12	75*112*12	550	450	500	-	18,5
75,00	2	Q4HG280M2C	Cast Iron	574	1021	2xM50	368/419	457	280	664	24	190	65	140	69,0	18	6314-ZZ C3	6314-ZZ C3	85*110*12 X2	70*90*10 X2	550	450	500	-	18,5
90,00	2	Q4HG280M2D	Cast Iron	574	1021	2xM50	368/419	457	280	664	24	190	65	140	69,0	18	6314-ZZ C3	6314-ZZ C3	85*110*12 X2	70*90*10 X2	550	450	500	-	18,5
110,00	2	Q4HG315S2C	Cast Iron	638	1000	2xM63	406	508	315	771	28	216	65	140	69,0	18	6316 C3	6316 C3	80 VA R	80 VA R	660	550	600	-	24,0
132,00	2	Q4HG315M2B	Cast Iron	638	1070	2xM63	457	508	315	771	28	216	65	140	69,0	18	6316 C3	6316 C3	80 VA R	80 VA R	660	550	600	-	24,0
160,00	2	Q4HG315L2A	Cast Iron	638	1070	2xM63	457	508	315	771	28	216	65	140	69,0	18	6316 C3	6316 C3	80 VA R	80 VA R	660	550	600	-	24,0
200,00	2	Q4HG315L2C	Cast Iron	638	1070	2xM63	457	508	315	771	28	216	65	140	69,0	18	6316 C3	6316 C3	80 VA R	80 VA R	660	550	600	-	24,0
250,00	2	Q3EP355M2C	Cast Iron	762	1512	4xM63	560	610	355	997	28	254	75	140	80,0	20	6317	6317	85*105*5,5	85*105*5,5	800	680	740	-	24,0
315,00	2	Q3EP355L2B	Cast Iron	762	1512	4xM63	560/630	610	355	997	28	254	75	140	80,0	20	6317	6317	85*105*5,5	85*105*5,5	800	680	740	-	24,0
355,00	2	Q3EP355L2C	Cast Iron	762	1512	4xM63	560/630	610	355	997	28	254	75	140	80,0	20	6317	6317	85*105*5,5	85*105*5,5	800	680	740	-	24,0

IE3 THREE PHASE CAST IRON MOTORS

Power (kW)	Number of Poles	Motor Type	Housing Type	Main Dimensions			Foot Mounted Motors						Shaft				Bearing		Seal		Flange (FA B5, B35)				
				AC	L	O	B	A	H	HD	K	C	D	E	GA	F	Drive Side	Non drive Side	Drive Side	Non drive Side	P	N	M	R	S
4 pole																									
0,55	4	Q3HG80M4C	Cast Iron	175	282	2xM25	100	125	80	225	10,0	50	19	40	21,5	6	6204 ZZ C3	6204 ZZ C3	20*30*7	20*30*7	200	130	165	-	12,0
0,75	4	Q3HG80M4D	Cast Iron	175	282	2xM25	100	125	80	225	10,0	50	19	40	21,5	6	6204 ZZ C3	6204 ZZ C3	20*30*7	20*30*7	200	130	165	-	12,0
1,10	4	Q3HG90L4C	Cast Iron	185	369	2xM25	125	140	90	232	10,0	56	24	50	27,0	8	6305-ZZ C3	6205-ZZ C3	25*40*7	25*40*7	200	130	165	-	13,5
1,50	4	Q3HG90L4D	Cast Iron	185	369	2xM25	125	140	90	232	10,0	56	24	50	27,0	8	6305-ZZ C3	6205-ZZ C3	25*40*7	25*40*7	200	130	165	-	13,5
2,20	4	Q3HG100L4C	Cast Iron	203	416	2xM25	140	160	100	266	12,0	63	28	60	31,0	8	6306-ZZ C3	6306-ZZ C3	30*47*7	30*47*7	250	180	215	-	14,5
3,00	4	Q3HG100L4D	Cast Iron	203	445	2xM25	140	160	100	266	12,0	63	28	60	31,0	8	6306-ZZ C3	6306-ZZ C3	30*47*7	30*47*7	250	180	215	-	14,5
4,00	4	Q3HG112M4D	Cast Iron	222	459	2xM25	140	190	112	290	12,0	70	28	60	31,0	8	6306-ZZ C3	6306-ZZ C3	30*47*7	30*47*7	250	180	215	-	14,5
5,50	4	Q3HG132S4B	Cast Iron	273	533	2xM32	178	216	132	337	12,0	89	38	80	41,0	10	6308-ZZ C3	6308-ZZ C3	40*62*10	40*62*10	300	230	265	-	14,5
7,50	4	Q3HG132M4D	Cast Iron	273	533	2xM32	178	216	132	337	12,0	89	38	80	41,0	10	6308-ZZ C3	6308-ZZ C3	40*62*10	40*62*10	300	230	265	-	14,5
11,00	4	Q3HG160M4C	Cast Iron	328	626	2xM32	210	254	160	387	14,5	108	42	110	45,0	12	6309-ZZ C3	6309-ZZ C3	45*72*10	45*72*10	350	250	300	-	18,5
11,00	4	Q3HSG160M4C	Cast Iron	273	605	2xM32	210	254	160	366	14,5	108	42	110	45,0	12	6309-ZZ C3	6309-ZZ C3	45*72*10	45*72*10	350	250	300	-	18,5
15,00	4	Q3HG160L4B	Cast Iron	328	626	2xM32	210	254	160	387	14,5	108	42	110	45,0	12	6309-ZZ C3	6309-ZZ C3	45*72*10	45*72*10	350	250	300	-	18,5
18,50	4	Q3HSG180M4B	Cast Iron	328	680	2xM32	241	279	180	407	14,5	121	48	110	51,5	14	6310 ZZ C3	6310 ZZ C3	50*80*10	50*80*10	350	250	300	-	18,5
22,00	4	Q3HG180L4B	Cast Iron	356	763	2xM40	279	279	180	441	14,5	121	48	110	51,5	14	6310 ZZ C3	6310 ZZ C3	50*80*10	50*80*10	350	250	300	-	18,5
30,00	4	Q3HG200L4D	Cast Iron	356	816	2xM50	305	318	200	458	18,5	133	55	110	59,0	16	6312-ZZ C3	6310-ZZ C3	60*90*10	50*80*10	400	300	350	-	18,5
37,00	4	Q3HG225S4B	Cast Iron	440	818	2xM50	286	356	225	524	18,5	149	60	140	64,0	18	6313-ZZ C3	6313-ZZ C3	65*100*13	65*100*13	450	350	400	-	18,5
45,00	4	Q3HG225M4C	Cast Iron	440	883	2xM50	311	356	225	524	18,5	149	60	140	64,0	18	6313-ZZ C3	6313-ZZ C3	65*100*13	65*100*13	450	350	400	-	18,5
55,00	4	Q3HG250M4B	Cast Iron	440	883	2xM50	349	406	250	549	24,0	168	65	140	69,0	18	6315-ZZ C3	6313-ZZ C3	65*100*13	65*100*13	550	450	500	-	18,5
75,00	4	Q4HG280M4C	Cast Iron	574	1021	2xM50	368/419	457	280	664	24,0	190	75	140	79,5	20	6317-ZZ C3	6317-ZZ C3	100*120*12 X 2	85*110*12 X 2	550	450	500	-	18,5
90,00	4	Q4HG280M4D	Cast Iron	574	1021	2xM50	368/419	457	280	664	24,0	190	75	140	79,5	20	6317-ZZ C3	6317-ZZ C3	100*120*12 X 2	85*110*12 X 2	550	450	500	-	18,5
110,00	4	Q4HG315S4C	Cast Iron	638	1030	2xM63	406	508	315	771	28,0	216	80	170	85,0	22	6319 C3	6319 C3	95 VA R	95 VA R	660	550	600	-	24,0
132,00	4	Q4HG315M4B	Cast Iron	638	1100	2xM63	457	508	315	771	28,0	216	80	170	85,0	22	6319 C3	6319 C3	95 VA R	95 VA R	660	550	600	-	24,0
160,00	4	Q4HG315L4A	Cast Iron	638	1100	2xM63	457	508	315	771	28,0	216	80	170	85,0	22	6319 C3	6319 C3	95 VA R	95 VA R	660	550	600	-	24,0
200,00	4	Q4HG315L4C	Cast Iron	638	1180	2xM63	457	508	315	771	28,0	216	80	170	85,0	22	6319 C3	6319 C3	95 VA R	95 VA R	660	550	600	-	24,0
250,00	4	Q3EP355M4C	Cast Iron	762	1542	4xM63	560	610	355	997	28,0	254	95	170	100,0	25	6322	6322	110*130*5,5	110*130*5,5	800	680	740	-	24,0
315,00	4	Q3EP355L4B	Cast Iron	762	1542	4xM63	560/630	610	355	997	28,0	254	95	170	100,0	25	6322	6322	110*130*5,5	110*130*5,5	800	680	740	-	24,0
355,00	4	Q3EP355L4C	Cast Iron	762	1542	4xM63	560/ 30	610	355	997	28,0	254	95	170	100,0	25	6322	6322	110*130*5,5	110*130*5,5	800	680	740	-	24,0
6 pole																									
0,37	6	Q3HG80M6A	Cast Iron	175	317	2xM25	100	125	80	225	10,0	50	19	40	21,5	6	6204 ZZ C3	6204 ZZ C3	20*30*7	20*30*7	200	130	165	-	12,0
0,55	6	Q3HG80M6B	Cast Iron	175	317	2xM25	100	125	80	225	10,0	50	19	40	21,5	6	6204 ZZ C3	6204 ZZ C3	20*30*7	20*30*7	200	130	165	-	12,0
0,75	6	Q3HG90L6C	Cast Iron	185	369	2xM25	125	140	90	232	10,0	56	24	50	27,0	8	6305-ZZ C3	6205-ZZ C3	25*40*7	25*40*7	200	130	165	-	13,5
1,10	6	Q3HG90L6D	Cast Iron	185	369	2xM25	125	140	90	232	10,0	56	24	50	27,0	8	6305-ZZ C3	6205-ZZ C3	25*40*7	25*40*7	200	130	165	-	13,5
1,50	6	Q3HG100L6D	Cast Iron	203	445	2xM25	140	160	100	266	12,0	63	28	60	31,0	8	6306-ZZ C3	6306-ZZ C3	30*47*7	30*47*7	250	180	215	-	14,5
2,20	6	Q3HG112M6D	Cast Iron	222	459	2xM25	140	190	112	290	12,0	70	28	60	31,0	8	6306-ZZ C3	6306-ZZ C3	30*47*7	30*47*7	250	180	215	-	14,5
3,00	6	Q3HG132S6A	Cast Iron	273	533	2xM32	178	216	132	337	12,0	89	38	80	41,0	10	6308-ZZ C3	6308-ZZ C3	40*62*10	40*62*10	300	230	265	-	14,5
4,00	6	Q3HG132M6A	Cast Iron	273	533	2xM32	178	216	132	337	12,0	89	38	80	41,0	10	6308-ZZ C3	6308-ZZ C3	40*62*10	40*62*10	300	230	265	-	14,5
5,50	6	Q3HG132M6B	Cast Iron	273	533	2xM32	178	216	132	337	12,0	89	38	80	41,0	10	6308-ZZ C3	6308-ZZ C3	40*62*10	40*62*10	300	230	265	-	14,5
7,50	6	Q3HG160M6C	Cast Iron	328	626	2xM32	210	254	160	387	14,5	108	42	110	45,0	12	6309-ZZ C3	6309-ZZ C3	45*72*10	45*72*10	350	250	300	-	18,5
11,00	6	Q3HG160L6D	Cast Iron	328	668	2xM32	210	254	160	387	14,5	108	42	110	45,0	12	6309-ZZ C3	6309-ZZ C3	45*72*10	45*72*10	350	250	300	-	18,5
15,00	6	Q3HG180L6B	Cast Iron	356	763	2xM40	279	279	180	441	14,5	121	48	110	51,5	14	6310 ZZ C3	6310 ZZ C3	50*80*10	50*80*10	350	250	300	-	18,5
18,50	6	Q3HG200L6C	Cast Iron	356	816	2xM50	305	318	200	458	18,5	133	55	110	59,0	16	6312-ZZ C3	6310-ZZ C3	60*90*10	50*80*10	400	300	350	-	18,5
22,00	6	Q3HG200L6D	Cast Iron	356	816	2xM50	305	318	200	458	18,5	133	55	110	59,0	16	6312-ZZ C3	6310-ZZ C3	60*90*10	50*80*10	400	300	350	-	18,5

IE3 THREE PHASE CAST IRON MOTORS

DIMENSION - B14a, B34a

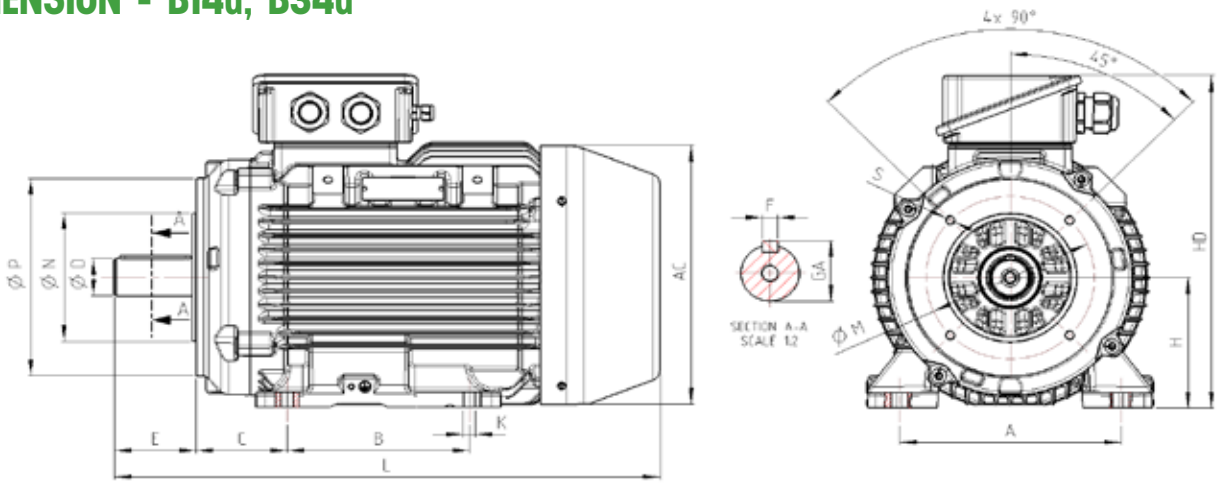

Power (kW)	Number of Poles	Motor Type	Housing Type	Main Dimensions			Foot Mounted Motors						Shaft				Bearing		Seal		Flange (FC B14a, B34a)				
				AC	L	O	B	A	H	HD	K	C	D	E	GA	F	Drive Side	Non drive Side	Drive Side	Non drive Side	P	N	M	R	S
2 pole																									
0.75	2	Q3HG80M2C	Cast Iron	175	282	2xM25	100	125	80	225	10.0	50	19	40	21.5	6	6204 ZZ C3	6204 ZZ C3	20*30*7	20*30*7	120	80	100	-	M6
1.10	2	Q3HG80M2D	Cast Iron	175	317	2xM25	100	125	80	225	10.0	50	19	40	21.5	6	6204 ZZ C3	6204 ZZ C3	20*30*7	20*30*7	120	80	100	-	M6
1.50	2	Q3HG90L2C	Cast Iron	185	339	2xM25	100	140	90	232	10.0	56	24	50	27.0	8	6305-ZZ C3	6205-ZZ C3	25*40*7	25*40*7	140	95	115	-	M8
2.20	2	Q3HG90L2D	Cast Iron	185	367	2xM25	125	140	90	232	10.0	56	24	50	27.0	8	6305-ZZ C3	6205-ZZ C3	25*40*7	25*40*7	140	95	115	-	M8
3.00	2	Q3HG100L2D	Cast Iron	203	416	2xM25	140	160	100	266	12.0	63	28	60	31.0	8	6306-ZZ C3	6306-ZZ C3	30*47*7	30*47*7	160	110	130	-	M8
4.00	2	Q3HG112M2C	Cast Iron	222	434	2xM25	140	190	112	290	12.0	70	28	60	31.0	8	6306-ZZ C3	6306-ZZ C3	30*47*7	30*47*7	160	110	130	-	M8
4.00	2	Q3HSG112M2C	Cast Iron	205	408	2xM25	140	190	112	283	12.0	70	28	60	31.0	8	6306-ZZ C3	6306-ZZ C3	30*47*7	30*47*7	160	110	130	-	M8
5.50	2	Q3HSG132S2C	Cast Iron	222	471	2xM32	140	216	132	311	12.0	89	38	80	41.0	10	6308-ZZ C3	6308-ZZ C3	40*62*10	40*62*10	300	130	165	-	M10
7.50	2	Q3HSG132S2D	Cast Iron	222	491	2xM32	140	216	132	311	12.0	89	38	80	41.0	10	6308-ZZ C3	6308-ZZ C3	40*62*10	40*62*10	200	130	165	-	M10
11.00	2	Q3HG160M2C	Cast Iron	328	626	2xM32	210	254	160	387	14.5	108	42	110	45.0	12	6309-ZZ C3	6309-ZZ C3	45*72*10	45*72*10	250	180	215	-	M10
11.00	2	Q3HSG160M2D	Cast Iron	273	563	2xM32	210	254	160	366	14.5	108	42	110	45.0	12	6309-ZZ C3	6309-ZZ C3	45*72*10	45*72*10	250	180	215	-	M10
15.00	2	Q3HG160M2D	Cast Iron	328	626	2xM32	210	254	160	387	14.5	108	42	110	45.0	12	6309-ZZ C3	6309-ZZ C3	45*72*10	45*72*10	250	180	215	-	M10
15.00	2	Q3HSG160M2DE	Cast Iron	273	605	2xM32	210	254	160	366	14.5	108	42	110	45.0	12	6309-ZZ C3	6309-ZZ C3	45*72*10	45*72*10	250	180	215	-	M10
18.50	2	Q3HG160L2C	Cast Iron	328	626	2xM32	254	254	160	387	14.5	108	42	110	45.0	12	6309-ZZ C3	6309-ZZ C3	45*72*10	45*72*10	250	180	215	-	M10

IE3 THREE PHASE CAST IRON MOTORS

Power (kW)	Number of Poles	Motor Type	Housing Type	Main Dimensions			Foot Mounted Motors						Shaft				Bearing		Seal		Flange (FC B14a, B34a)				
				AC	L	O	B	A	H	HD	K	C	D	E	GA	F	Drive Side	Non drive Side	Drive Side	Non drive Side	P	N	M	R	S
4 pole																									
0,55	4	Q3HG80M4C	Cast Iron	175	282	2xM25	100	125	80	225	10,0	50	19	40	21,5	6	6204 ZZ C3	6204 ZZ C3	20*30*7	20*30*7	120	80	100	-	M6
0,75	4	Q3HG80M4D	Cast Iron	175	282	2xM25	100	125	80	225	10,0	50	19	40	21,5	6	6204 ZZ C3	6204 ZZ C3	20*30*7	20*30*7	120	80	100	-	M6
1,10	4	Q3HG90L4C	Cast Iron	185	367	2xM25	125	140	90	232	10,0	56	24	50	27,0	8	6305-ZZ C3	6205-ZZ C3	25*40*7	25*40*7	140	95	115	-	M8
1,50	4	Q3HG90L4D	Cast Iron	185	367	2xM25	125	140	90	232	10,0	56	24	50	27,0	8	6305-ZZ C3	6205-ZZ C3	25*40*7	25*40*7	140	95	115	-	M8
2,20	4	Q3HG100L4C	Cast Iron	203	416	2xM25	140	160	100	266	12,0	63	28	60	31,0	8	6306-ZZ C3	6306-ZZ C3	30*47*7	30*47*7	160	110	130	-	M8
3,00	4	Q3HG100L4D	Cast Iron	203	445	2xM25	140	160	100	266	12,0	63	28	60	31,0	8	6306-ZZ C3	6306-ZZ C3	30*47*7	30*47*7	160	110	130	-	M8
4,00	4	Q3HG112M4D	Cast Iron	222	464	2xM25	140	190	112	290	12,0	70	28	60	31,0	8	6306-ZZ C3	6306-ZZ C3	30*47*7	30*47*7	160	110	130	-	M8
5,50	4	Q3HG132S4B	Cast Iron	273	533	2xM32	178	216	132	337	12,0	89	38	80	41,0	10	6308-ZZ C3	6308-ZZ C3	40*62*10	40*62*10	300	130	165		M10
7,50	4	Q3HG132M4D	Cast Iron	273	533	2xM32	178	216	132	337	12,0	89	38	80	41,0	10	6308-ZZ C3	6308-ZZ C3	40*62*10	40*62*10	300	130	165	-	M10
11,00	4	Q3HG160M4C	Cast Iron	328	626	2xM32	210	254	160	387	14,5	108	42	110	45,0	12	6309-ZZ C3	6309-ZZ C3	45*72*10	45*72*10	250	180	215	-	M10
11,00	4	Q3HSG160M4C	Cast Iron	273	605	2xM32	210	254	160	366	14,5	108	42	110	45,0	12	6309-ZZ C3	6309-ZZ C3	45*72*10	45*72*10	250	180	215	-	M10
15,00	4	Q3HG160L4B	Cast Iron	328	626	2xM32	254	254	160	387	14,5	108	42	110	45,0	12	6309-ZZ C3	6309-ZZ C3	45*72*10	45*72*10	250	180	215	-	M10
6 pole																									
0,37	6	Q3HG80M6A	Cast Iron	175	317	2xM25	100	125	80	225	10,0	50	19	40	21,5	6	6204 ZZ C3	6204 ZZ C3	20*30*7	20*30*7	120	80	100	-	M6
0,55	6	Q3HG80M6B	Cast Iron	175	317	2xM25	100	125	80	225	10,0	50	19	40	21,5	6	6204 ZZ C3	6204 ZZ C3	20*30*7	20*30*7	120	80	100	-	M6
0,75	6	Q3HG90L6C	Cast Iron	185	367	2xM25	125	140	90	232	10,0	56	24	50	27,0	8	6305-ZZ C3	6205-ZZ C3	25*40*7	25*40*7	140	95	115	-	M8
1,10	6	Q3HG90L6D	Cast Iron	185	367	2xM25	125	140	90	232	10,0	56	24	50	27,0	8	6305-ZZ C3	6205-ZZ C3	25*40*7	25*40*7	140	95	115	-	M8
1,50	6	Q3HG100L6D	Cast Iron	203	445	2xM25	140	160	100	266	12,0	63	28	60	31,0	8	6306-ZZ C3	6306-ZZ C3	30*47*7	30*47*7	160	110	130	-	M8
2,20	6	Q3HG112M6D	Cast Iron	222	464	2xM25	140	190	112	290	12,0	70	28	60	31,0	8	6306-ZZ C3	6306-ZZ C3	30*47*7	30*47*7	160	110	130	-	M8
3,00	6	Q3HG132S6A	Cast Iron	273	533	2xM32	178	216	132	337	12,0	89	38	80	41,0	10	6308-ZZ C3	6308-ZZ C3	40*62*10	40*62*10	200	230	165	-	M10
4,00	6	Q3HG132M6A	Cast Iron	273	533	2xM32	178	216	132	337	12,0	89	38	80	41,0	10	6308-ZZ C3	6308-ZZ C3	40*62*10	40*62*10	200	230	165	-	M10
5,50	6	Q3HG132M6B	Cast Iron	273	533	2xM32	178	216	132	337	12,0	89	38	80	41,0	10	6308-ZZ C3	6308-ZZ C3	40*62*10	40*62*10	200	230	165	-	M10
7,50	6	Q3HG160M6C	Cast Iron	328	626	2xM32	210	254	160	387	14,5	108	42	110	45,0	12	6309-ZZ C3	6309-ZZ C3	45*72*10	45*72*10	250	180	215	-	M10
11,00	6	Q3HG160L6D	Cast Iron	328	668	2xM32	254	254	160	387	14,5	108	42	110	45,0	12	6309-ZZ C3	6309-ZZ C3	45*72*10	45*72*10	250	180	215	-	M10

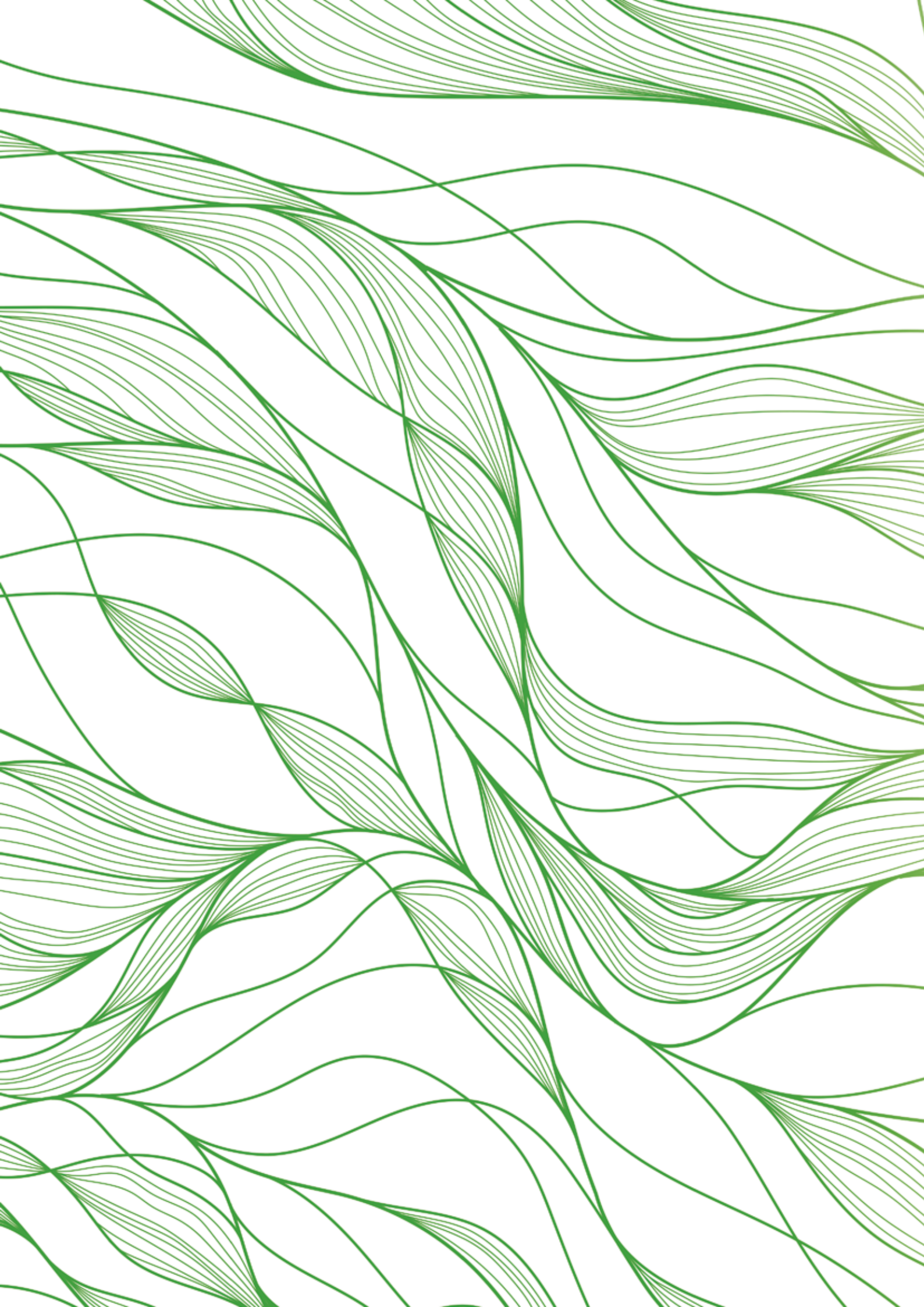

SMOKE EXTRACTION MOTORS

IE3-IE4 SMOKE EXTRACTION MOTORS

F300 SERIES ELECTRICAL CHARACTERISTICS @ 50 Hz

	MOTOR TYPE	HOUSING TYPE	RATED VALUES					STARTING VALUES				Break-down Torque Ratio	EFFICIENCY *			Cosφ	J	Weight [B3]	Sound Pressure Level
			Power		SPEED	CURRENT	TORQUE	CURRENT IA / IN		TORQUE MA / MN			η %						
			kW	HP	rpm	A	Nm	λ	Δ	λ	Δ	Mk/ Mn	4/4	3/4	2/4	4/4	kgm²	kg	dBA**
2 pole 3000 rpm																			
230/400 V	S3H80M2C	Aluminium	0,75	1,00	2903	3,06/1,77	2,46	8,3	-	3,9	-	4,3	80,7	79,5	75,8	0,81	0,00140	10,5	57
230/400 V	S3H80M2D	Aluminium	1,10	1,50	2908	4,25/2,45	3,60	9,0	-	4,0	-	4,3	82,7	80,2	76,4	0,83	0,00170	13,0	57
230/400 V	S3H90L2C	Aluminium	1,50	2,00	2926	5,4/3,1	4,90	9,5	-	3,1	-	4,6	84,2	86,2	84,2	0,87	0,00249	17,0	62
230/400 V	S3H90L2D	Aluminium	2,20	3,00	2931	8,5/4,9	7,17	8,1	-	2,6	-	4,1	85,9	85,0	83,0	0,81	0,00283	17,8	62
230/400 V	S3H100L2D	Aluminium	3,00	4,00	2934	10,0/5,7	9,77	9,4	-	3,4	-	4,0	87,1	85,3	85,1	0,90	0,00536	25,8	63
400/690 V	S3H112M2C	Aluminium	4,00	5,50	2917	7,5/4,3	13,10	-	9,4	-	3,2	4,1	88,1	88,0	85,8	0,92	0,00604	29,5	67
400/690 V	S3H132S2C	Aluminium	5,50	7,50	2927	11,1/6,4	18,00	-	8,4	-	3,2	4,3	89,2	89,0	88,5	0,88	0,02792	50,0	69
400/690 V	S3H132S2D	Aluminium	7,50	10,00	2934	14,5/8,4	24,30	-	9,4	-	3,3	4,8	90,1	89,0	88,5	0,86	0,03091	54,2	69
400/690 V	S3H160M2C	Aluminium	11,00	15,00	2971	20,8/12,0	35,40	-	11,1	-	3,3	5,1	91,2	89,9	87,6	0,86	0,03517	81,2	70
400/690 V	S3H160M2D	Aluminium	15,00	20,00	2967	27,6/16	48,30	-	10,9	-	3,4	4,9	91,9	90,4	87,9	0,87	0,04322	87,4	70
400/690 V	S3H160L2C	Aluminium	18,50	25,00	2972	37,4/21,6	59,30	-	11,0	-	3,5	5,4	92,4	90,7	88,0	0,80	0,04809	93,6	70
400/690 V	S3H180M2A	Aluminium	22,00	30,00	2969	40,3/23,3	71,06	-	9,7	-	3,0	4,1	92,7	92,8	91,9	0,90	0,09460	115,0	77
400/690 V	S3H200L2C	Aluminium	30,00	40,00	2970	53,3/30,8	97,30	-	10,2	-	3,0	7,0	93,3	92,8	91,6	0,90	0,10277	150,6	78
400/690 V	S3H200L2D	Aluminium	37,00	50,00	2969	62,8/36,3	118,60	-	9,8	-	2,9	4,0	93,7	93,7	93,1	0,93	0,11383	166,0	78
400/690 V	S3H225M2B	Aluminium	45,00	60,00	2976	77,7/44,9	144,40	-	10,4	-	3,5	5,6	94,0	94,4	93,5	0,89	0,23500	213,0	80
400/690 V	S3EP250M2B	Cast Iron	55,00	75,00	2983	96,3/55,6	175,90	-	8,5	-	2,4	4,4	94,3	93,6	92,1	0,92	0,48700	475,0	81
400/690 V	S4HP280M2C	Cast Iron	2,00	75,00	2982	124,2/71,8	240,00	-	6,7	-	2,6	3,0	95,6	95,6	94,9	0,92	1,17890	653,0	79
400/690 V	S4HP280M2D	Cast Iron	2,00	90,00	2985	146,7/84,8	288,20	-	7,8	-	2,9	5,7	95,8	95,7	94,9	0,92	1,26380	680,0	79
400/690 V	S4HP315S2C	Cast Iron	2,00	110,00	2988	193,9/111,9	352,10	-	10,8	-	3,6	5,2	96,0	95,4	94,2	0,85	1,66000	880,0	87
400/690 V	S4HP315M2B	Cast Iron	2,00	132,00	2986	228,2/131,9	422,50	-	9,0	-	3,8	10,4	96,2	96,1	92,5	0,88	1,84000	952,0	87
400/690 V	S4HP315L2A	Cast Iron	2,00	160,00	2990	290,6/168,0	511,10	-	12,1	-	6,7	13,4	96,3	95,8	94,5	0,84	2,05000	1010,0	87
400/690 V	S4HP315L2C	Cast Iron	2,00	200,00	2983	331,0/191,2	644,0	-	9,4	-	4,4	8,68	96,5	96,6	95,9	0,89	2,30000	1144,0	87
4 pole 1500 rpm																			
230/400 V	S3H80M4C	Aluminium	0,55	0,75	1455	2,5/1,4	3,60	5,0	-	2,7	-	3,6	80,8	78,2	77,1	0,71	0,00190	10,6	53
230/400 V	S3H80M4D	Aluminium	0,75	1,00	1458	3,3/1,9	4,93	7,4	-	3,2	-	4,0	82,5	80,4	77,1	0,71	0,00261	11,7	52
230/400 V	S3H90L4C	Aluminium	1,10	1,50	1448	4,3/2,5	7,30	7,5	-	3,4	-	3,9	84,1	81,0	77,3	0,77	0,00464	17,9	53
230/400 V	S3H90L4D	Aluminium	1,50	2,00	1452	6,05/3,5	9,90	8,0	-	3,8	-	4,3	85,3	84,9	82,0	0,74	0,00526	20,0	53
230/400 V	S3H100L4C	Aluminium	2,20	3,00	1458	9,2/5,3	14,40	7,5	-	3,5	-	4,3	86,7	85,4	83,5	0,80	0,00871	26,0	56
230/400 V	S3H100L4D	Aluminium	3,00	4,00	1457	11,3/6,5	19,66	8,6	-	3,3	-	4,0	87,7	86,1	84,4	0,78	0,01059	29,8	58
400/690 V	S3H112M4D	Aluminium	4,00	5,50	1765	9,3/5,2	26,20	-	8,8	-	3,7	4,6	88,6	87,3	86,4	0,78	0,01383	35,3	54
400/690 V	S3H132S4B	Aluminium	5,50	7,50	1473	11,2/6,5	35,50	-	8,7	-	2,9	3,9	89,6	87,3	85,0	0,81	0,03560	52,0	60
400/690 V	S3H132M4D	Aluminium	7,50	10,00	1474	15,2/8,8	48,53	-	8,0	-	2,3	3,6	90,4	90,0	88,7	0,81	0,04030	63,6	63
400/690 V	S3H160L4A	Aluminium	11,00	15,00	1475	22,0/12,7	71,30	-	7,3	-	2,7	3,1	91,4	91,6	90,7	0,79	0,05940	90,0	63
400/690 V	S3H160L4B	Aluminium	15,00	20,00	1480	31,7/18,3	96,90	-	7,9	-	3,0	3,6	92,1	91,4	89,6	0,74	0,09005	100,0	62
400/690 V	S3H180M4B	Aluminium	18,50	25,00	1485	35,0/20,2	118,90	-	9,2	-	3,0	3,6	92,6	91,8	90,3	0,84	0,18660	142,0	68
400/690 V	S3H180L4B	Aluminium	22,00	30,00	1487	42,4/24,5	141,10	-	9,5	-	3,1	3,8	93,0	92,6	91,5	0,82	0,18660	157,4	68
400/690 V	S3H200L4D	Aluminium	30,00	40,00	1484	57,2/33,1	194,15	-	7,5	-	2,1	3,3	93,6	93,8	93,6	0,83	0,22166	176,2	68
400/690 V	S3H225S4B	Aluminium	37,00	50,00	1481	59,8/34,6	238,60	-	8,8	-	2,1	3,7	93,9	94,1	93,4	0,91	0,36400	190,0	71
400/690 V	S3H225M4C	Aluminium	45,00	60,00	1485	85,1/49,2	291,90	-	7,4	-	2,6	3,8	94,2	93,8	93,1	0,83	0,43500	236,4	71
400/690 V	S3EP250M4E	Cast Iron	55,00	75,00	1492	104,7/60,5	353,10	-	8,2	-	3,0	3,5	94,6	93,8	91,5	0,81	0,90800	494,0	72
400/690 V	S4HP280M4C	Cast Iron	4,00	75,00	1492	127,9/73,9	480,50	-	5,9	-	1,7	4,3	96,0	95,8	95,1	0,89	1,72100	694,0	70
400/690 V	S4HP280M4D	Cast Iron	4,00	90,00	1492	153,1/88,5	576,60	-	7,9	-	2,4	3,4	96,1	96,0	95,2	0,88	1,84140	694,0	70
400/690 V	S4HP315S4C	Cast Iron	4,00	110,00	1494	191,8/110,9	704,20	-	8,5	-	3,5	6,6	96,3	95,5	95,7	0,87	3,42000	971,0	83
400/690 V	S4HP315M4B	Cast Iron	4,00	132,00	1491	229,4/132,6	845,30	-	8,7	-	3,3	8,55	96,4	95,9	95,0	0,86	3,85000	1016,0	83
400/690 V	S4HP315L4A	Cast Iron	4,00	160,00	1492	280,5/162,1	964,10	-	9,5	-	4,8	5,65	96,6	95,8	95,2	0,86	4,66000	1156,0	83
400/690 V	S4HP315L4C	Cast Iron	4,00	200,00	1488	332,0/191,7	1281,80	-	7,4	-	3,6	4,25	96,7	96,4	96,3	0,89	4,66000	1167,0	83

* According to IEC 60034-2-1
** The sound pressure measurements are taken 1m away from the motor
** Tolerance +3 dBA
*** According to EN 12101-3

IE3-IE4 SMOKE EXTRACTION MOTORS

F300 SERIES ELECTRICAL CHARACTERISTICS @ 60 Hz

	MOTOR TYPE	HOUSING TYPE	RATED VALUES				STARTING VALUES				Break-down Torque Ratio	EFFICIENCY *			Cosφ	J	Weight (B3)	Sound Pressure Level
			Power	SPEED	CURRENT	TORQUE	CURRENT IA / IN		TORQUE MA / MN			η %						
			kW	rpm	A	Nm	λ	Δ	λ	Δ	Mk/ Mn	4/4	3/4	2/4	4/4	kgm²	kg	dBA**
2 pole 3600 rpm																		
460/795 V	S3H80M2C40-KG	Aluminium	0,75	3498	2,7/1,55	2,05	8,00	-	3,7	-	4,2	IE3-77,0	75,9	72,3	0,83	0,00140	10,5	57
460/795 V	S3H80M2D40-KG	Aluminium	1,10	3505	3,6/2,1	3,00	8,80	-	3,8	-	4,3	IE3-84,0	81,5	77,6	0,83	0,00170	13,0	57
460/795 V	S3H90L2C40-KG	Aluminium	1,50	3532	4,4/2,7	4,07	9,20	-	2,9	-	4,5	IE3-85,5	87,5	85,5	0,86	0,00249	17,0	62
460/795 V	S3H90L2D40-KG	Aluminium	2,20	3536	7,4/4,3	5,95	7,88	-	2,5	-	4,05	IE3-86,5	85,6	83,6	0,80	0,00283	17,8	62
460/795 V	S3H100L2D40-KG	Aluminium	3,00	3536	8,5/5,0	8,10	9,10	-	3,2	-	3,9	IE3-88,5	87,6	86,2	0,92	0,00536	25,8	63
460/795 V	S3H112M2C40-KG	Aluminium	4,00	3517	6,7/3,9	10,90	-	9,10	-	3,1	4,0	IE3-88,5	88,1	86,9	0,92	0,00604	29,5	67
460/795 V	S3H132S2C40-KG	Aluminium	5,50	3532	9,6/5,5	14,90	-	8,10	-	3,0	4,2	IE3-89,5	89,8	89,0	0,86	0,02792	50,0	69
460/795 V	S3H132S2D40-KG	Aluminium	7,50	3536	12,7/7,3	20,30	-	9,10	-	3,1	4,6	IE3-90,2	89,8	89,0	0,86	0,03091	54,2	69
460/795 V	S3H160M2C40-KG	Aluminium	11,00	3572	18,2/10,5	29,40	-	10,80	-	3,1	5,0	IE3-91,0	91,5	89,5	0,85	0,03517	81,2	70
460/795 V	S3H160M2D40-KG	Aluminium	15,00	3568	13,4/7,7	40,20	-	10,50	-	3,2	4,7	IE3-91,0	90,2	87,7	0,86	0,04322	87,4	70
460/795 V	S3H160L2C40-KG	Aluminium	18,50	3573	33,1/19,1	49,50	-	10,70	-	3,4	5,3	IE3-91,7	91,5	89,5	0,82	0,04809	93,6	70
460/795 V	S3H180M2A40-KG	Aluminium	22,00	3572	34,7/20,1	58,86	-	9,40	-	2,8	3,99	IE3-91,7	91,9	91,0	0,91	0,09460	115,0	77
460/795 V	S3H200L2C40-KG	Aluminium	30,00	3572	45,9/26,5	80,22	-	9,90	-	2,9	6,9	IE3-92,4	91,9	90,7	0,90	0,10277	150,6	78
460/795 V	S3H200L2D40-KG	Aluminium	37,00	3571	54,9/31,7	99,00	-	9,50		2,7	4,0	IE3-93,0	93,0	92,4	0,93	0,11383	166,0	78
460/795 V	S3H225M2B40-KG	Aluminium	45,00	3579	67,9/39,2	120,13	-	10,10	-	3,3	5,5	IE3-93,6	94,0	93,1	0,88	0,23500	213,0	80
460/795 V	S3EP250M2B40-KG	Cast Iron	55,00	3585	83,8/48,4	147,30	-	8,20	-	2,3	4,3	IE3-93,6	93,2	92,6	0,92	0,48700	475,0	81
460/795 V	S4HP280M2C40-KG	Cast Iron	75,00	3584	107,4/61,9	200,50	-	7,30	-	2,8	5,9	IE4-95,0	94,5	93,2	0,93	1,17890	653,0	82
460/795 V	S4HP280M2D40-KG	Cast Iron	90,00	3586	128,4/74,2	239,80	-	8,50	-	3,5	7,7	IE4-95,4	95,0	93,7	0,92	1,26380	680,0	82
460/795 V	***S4HP315S2C40-KI	Cast Iron	110,00	-	-	-	-	-	-	-	-	-	-	-	-	-	-	-
460/795 V	***S4HP315M2B40-KI	Cast Iron	132,00	-	-	-	-	-	-	-	-	-	-	-	-	-	-	-
460/795 V	***S4HP315L2A40-KI	Cast Iron	160,00	-	-	-	-	-	-	-	-	-	-	-	-	-	-	-
460/795 V	***S4HP315L2C40-KI	Cast Iron	200,00	-	-	-	-	-	-	-	-	-	-	-	-	-	-	-
4 pole 1800 rpm																		
460/795 V	S3H80M4C40-KG	Aluminium	0,55	1758	2,25/1,3	3,02	4,7	-	2,60	-	3,55	IE3-81,1	78,0	76,9	0,70	0,00190	10,6	53
460/795 V	S3H80M4D40-KG	Aluminium	0,75	1758	3,0/1,75	4,13	7,03	-	2,75	-	3,92	IE3-83,5	81,0	79,0	0,70	0,00261	11,7	52
460/795 V	S3H90L4C40-KG	Aluminium	1,10	1752	4,0/2,3	6,00	7,3	-	3,20	-	3,80	IE3-86,5	84,1	82,7	0,78	0,00464	17,9	53
460/795 V	S3H90L4D40-KG	Aluminium	1,50	1753	5,4/3,1	8,20	7,7	-	3,70	-	4,20	IE3-86,5	86,1	83,2	0,72	0,00526	20,0	53
460/795 V	S3H100L4C40-KG	Aluminium	2,20	-	-	-	-	-	-	-	-	-	-	-	-	-	-	-
460/795 V	S3H100L4D40-KG	Aluminium	3,00	-	-	-	-	-	-	-	-	-	-	-	-	-	-	-
460/795 V	S3H112M4D40-KG	Aluminium	4,00	1765	8,2/4,7	21,70	-	8,5	-	3,5	4,50	IE3-89,5	88,6	87,8	0,79	0,01383	35,3	54
460/795 V	S3H132S4B40-KG	Aluminium	5,50	-	-	-	-	-	-	-	-	-	-	-	-	-	-	-
460/795 V	S3H132M4D40-KG	Aluminium	7,50	1775	13,4/7,7	40,35	-	7,5	-	2,1	3,50	IE3-91,7	91,1	89,9	0,80	0,04030	63,6	63
460/795 V	S3H160L4A40-KG	Aluminium	11,00	1777	19,3/11,2	59,00	-	7,2	-	2,5	2,90	IE3-92,4	92,0	89,8	0,81	0,05940	90,0	63
460/795 V	S3H160L4B40-KG	Aluminium	15,00	1782	27,8/16,0	80,40	-	7,6	-	2,9	3,50	IE3-93,0	92,1	91,5	0,74	0,09005	100,0	62
460/795 V	S3H180M4B40-KG	Aluminium	18,50	1786	30,5/17,6	98,90	-	7,8	-	2,0	3,56	IE3-93,6	92,1	90,5	0,84	0,18660	142,0	68
460/795 V	S3H180L4B40-KG	Aluminium	22,00	1786	37,3/21,5	117,50	-	9,3	-	2,9	3,69	IE3-93,6	93,2	92,1	0,80	0,18660	157,4	68
460/795 V	S3H200L4D40-KG	Aluminium	30,00	1786	49,7/28,7	160,50	-	7,3	-	2,0	3,20	IE3-94,1	93,5	92,6	0,82	0,22166	176,2	68
460/795 V	S3H225S4B40-KG	Aluminium	37,00	-	-	-	-	-	-	-	-	-	-	-	-	-	-	-
460/795 V	S3H225M4C40-KG	Aluminium	45,00	-	-	-	-	-	-	-	-	-	-	-	-	-	-	-
460/795 V	S3HP250M4E40-KG	Cast Iron	55,00	1793	90,5/52,3	293,80	-	7,9	-	2,8	3,40	IE3-95,4	94,8	91,3	0,80	0,90800	494,0	72
460/795 V	S4HP280M4C40-KG	Cast Iron	75,00	1793	108,8/62,9	400,90	-	7,1	-	2,1	3,3	IE4-96,2	96,0	95,3	0,90	1,72100	694,0	73
460/795 V	S4HP280M4D40-KG	Cast Iron	90,00	1794	146,4/84,6	480,70	-	7,5	-	2,7	4,5	IE4-96,2	96,1	95,3	0,81	1,84140	694,0	73
460/795 V	***S4HP315S4C40-KI	Cast Iron	110,00	-	-	-	-	-	-	-	-	-	-	-	-	-	-	-
460/795 V	***S4HP315M4B40-KI	Cast Iron	132,00	-	-	-	-	-	-	-	-	-	-	-	-	-	-	-
460/795 V	***S4HP315L4A40-KI	Cast Iron	160,00	-	-	-	-	-	-	-	-	-	-	-	-	-	-	-
460/795 V	***S4HP315L4C40-KI	Cast Iron	200,00	-	-	-	-	-	-	-	-	-	-	-	-	-	-	-

* According to IEC 60034-2-1
** The sound pressure measurements are taken 1m away from the motor
** Tolerance +3 dBA
*** Please contact us for your requests.

DOUBLE SPEED THREE PHASE SMOKE EXTRACTION MOTORS

DAHLANDER F300 SERIES 2-4 POLE ELECTRICAL CHARACTERISTICS @ 50 Hz

	MOTOR TYPE	HOUSING TYPE	RATED VALUES					STARTING VALUES				Break-down Torque Ratio	EFFICIENCY *			Cosφ	J	Weight (B3)	Sound Pressure Level
			Power		SPEED	CURRENT	TORQUE	CURRENT IA / IN		TORQUE MA / MN			η %						
			kW	HP	rpm	A	Nm	λ	Δ	λ	Δ	Mk/ Mn	4/4	3/4	2/4	4/4	kgm²	kg	dBA**
	@2 pole 3000 rpm																		
400 V (YY/Y)	S2H80M2-4A	Aluminium	0.80	1.07	2848	1.90	2.69	4.6	-	2.0	-	2.4	74.50	-	-	0.83	0.00205	9.2	56
400 V (YY/Y)	S2H80M2-4B	Aluminium	1.10	1.47	2865	2.30	3.67	5.0	-	2.0	-	2.3	79.60	-	-	0.87	0.00205	10.7	54
400 V (YY/Y)	S2H90S2-4B	Aluminium	1.50	2.00	2860	3.30	5.04	5.7	-	2.3	-	2.7	75.00	-	-	0.88	0.00267	15.8	54
400 V (YY/Y)	S2H90L2-4C	Aluminium	2.20	2.93	2835	4.53	7.39	5.1	-	1.8	-	2.2	76.50	-	-	0.92	0.00205	18.5	55
400 V (YY/Y)	S2H100L2-4B	Aluminium	2.50	3.33	2910	5.20	8.16	8.4	-	3.1	-	3.7	83.80	-	-	0.88	0.00521	26.0	70
400 V (YY/Y)	S2H100L2-4D	Aluminium	3.10	4.13	2913	6.25	10.20	8.2	-	2.8	-	3.3	82.50	-	-	0.90	0.00694	30.0	60
400 V (YY/Y)	S2H112M2-4D	Aluminium	4.40	5.87	2925	9.05	14.34	9.0	-	3.2	-	3.9	86.20	-	-	0.85	0.01383	36.6	71
400 V (YY/Y)	S2H132S2-4B	Aluminium	6.00	8.00	2963	15.40	19.30	8.5	-	3.3	-	4.9	85.50	-	-	0.70	0.03560	62.4	73
400 V (YY/Y)	S2H132M2-4D	Aluminium	8.00	10.67	2927	16.30	26.10	6.7	-	2.1	-	3.1	87.80	-	-	0.86	0.03842	62.6	73
400 V (YY/Y)	S2H160M2-4B	Aluminium	12.00	16.00	2974	26.90	38.60	9.7	-	3.5	-	5.1	89.70	-	-	0.75	0.03517	100.0	61
400 V (YY/Y)	S2H160L2-4B	Aluminium	16.00	21.33	2963	30.10	51.76	7.9	-	2.4	-	3.5	88.90	-	-	0.87	0.05940	108.0	62
400 V (YY/Y)	S2H180L2-4B	Aluminium	25.00	33.33	2975	45.00	80.30	11.1	-	2.2	-	5.5	91.40	-	-	0.88	0.11398	142.0	70
400 V (YY/Y)	S2H180L2-4C	Aluminium	20.00	26.67	2957	32.80	64.60	7.2	-	2.0	-	3.2	91.40	-	-	0.96	0.14659	131.3	70
400 V (YY/Y)	S2H200L2-4B	Aluminium	33.00	44.00	2973	66.30	106.00	9.7	-	2.1	-	5.3	91.40	-	-	0.80	0.18598	149.0	70
400 V (YY/Y)	S2H225M2-4C	Aluminium	37.00	49.33	2979	89.60	119.40	8.6	-	2.9	-	3.8	93.00	-	-	0.70	0.36420	234.0	71
400 V (YY/Y)	S2H225M2-4D	Aluminium	46.00	61.33	2973	91.40	147.00	8.2	-	2.3	-	5.4	93.10	-	-	0.88	0.43500	250.0	69
400 V (YY/Y)	S2EP250M2-4C	Cast Iron	55.00	73.33	2978	92.00	176.40	9.5	-	2.0	-	4.0	93.30	-	-	0.91	0.36400	506.0	72
400 V (YY/Y)	S2EP280M2-4B	Cast Iron	75.00	100.00	2983	139.80	240.30	7.9	-	2.4	-	3.3	93.80	-	-	0.89	1.14800	609.0	76
	@4 pole 1500 rpm																		
400 V (YY/Y)	S2H80M2-4A	Aluminium	0.20	0.27	1437	0.49	1.33	-	4.6	-	1.7	2.5	71.40	-	-	0.82	0.00205	9.2	46
400 V (YY/Y)	S2H80M2-4B	Aluminium	0.25	0.33	1483	1.20	1.61	-	7.5	-	5.4	7.9	68.50	-	-	0.44	0.00205	10.7	54
400 V (YY/Y)	S2H90S2-4B	Aluminium	0.37	0.49	1480	1.52	2.38	-	9.4	-	5.8	8.5	71.50	-	-	0.49	0.00267	15.8	57
400 V (YY/Y)	S2H90L2-4C	Aluminium	0.50	0.67	1475	1.79	3.23	-	9.5	-	5.7	7.5	75.00	-	-	0.54	0.00205	18.5	58
400 V (YY/Y)	S2H100L2-4B	Aluminium	0.65	0.87	1452	1.40	4.27	-	9.4	-	2.4	3.1	78.00	-	-	0.86	0.00521	26.0	58
400 V (YY/Y)	S2H100L2-4D	Aluminium	0.80	1.07	1448	1.67	5.26	-	6.4	-	2.1	2.9	79.00	-	-	0.87	0.00694	30.0	57
400 V (YY/Y)	S2H112M2-4D	Aluminium	1.10	1.47	1455	2.23	7.20	-	7.4	-	2.3	3.3	81.40	-	-	0.85	0.01383	36.6	60
400 V (YY/Y)	S2H132S2-4B	Aluminium	1.50	2.00	1482	3.10	9.66	-	9.9	-	2.7	4.6	82.00	-	-	0.80	0.03560	62.4	63
400 V (YY/Y)	S2H132M2-4D	Aluminium	2.00	2.67	1468	4.20	13.10	-	6.0	-	2.0	2.8	81.50	-	-	0.88	0.03842	62.6	63
400 V (YY/Y)	S2H160M2-4B	Aluminium	3.00	4.00	1485	6.25	19.30	-	8.8	-	3.2	4.3	85.50	-	-	0.78	0.03517	100.0	56
400 V (YY/Y)	S2H160L2-4B	Aluminium	4.00	5.33	1479	7.70	25.60	-	6.6	-	2.2	2.9	85.50	-	-	0.84	0.05940	108.0	58
400 V (YY/Y)	S2H180L2-4B	Aluminium	6.30	8.40	1485	12.00	40.50	-	9.4	-	2.4	4.7	88.50	-	-	0.85	0.11398	142.0	73
400 V (YY/Y)	S2H180L2-4C	Aluminium	5.00	6.67	1479	9.00	32.30	-	6.0	-	1.4	2.8	88.30	-	-	0.91	0.14659	131.3	73
400 V (YY/Y)	S2H200L2-4B	Aluminium	8.50	11.33	1484	15.60	54.70	-	8.9	-	2.2	4.3	91.60	-	-	0.86	0.18598	149.0	73
400 V (YY/Y)	S2H225M2-4C	Aluminium	9.00	12.00	1489	17.70	58.00	-	9.8	-	3.0	5.0	90.40	-	-	0.86	0.36420	234.0	57
400 V (YY/Y)	S2H225M2-4D	Aluminium	12.00	16.00	1485	22.40	77.90	-	7.5	-	2.2	3.7	90.10	-	-	0.89	0.43500	250.0	57
400 V (YY/Y)	S2EP250M2-4C	Cast Iron	15.00	20.00	1488	26.00	96.30	-	9.0	-	2.4	4.0	91.00	-	-	0.91	0.36400	506.0	75
400 V (YY/Y)	S2EP280M2-4B	Cast Iron	20.00	26.67	1492	39.10	129.20	-	6.9	-	2.0	2.3	90.90	-	-	0.87	1.14800	609.0	68

* According to IEC 60034-2-1
** The sound pressure measurements are taken 1m away from the motor
** Tolerance +3 dBA

DOUBLE SPEED THREE PHASE SMOKE EXTRACTION MOTORS

DAHLANDER F300 SERIES 4-8 POLE ELECTRICAL CHARACTERISTICS @ 50 Hz

	MOTOR TYPE	HOUSING TYPE	RATED VALUES					STARTING VALUES				Break-down Torque Ratio	EFFICIENCY *			Cosφ	J	Weight (B3)	Sound Pressure Level
			Power		SPEED	CURRENT	TORQUE	CURRENT IA / IN		TORQUE MA / MN			η %						
			kW	HP	rpm	A	Nm	⅄	Δ	⅄	Δ	Mk/ Mn	4/4	3/4	2/4	4/4	kgm²	kg	dBA**
@4 pole 1500 rpm																			
400 V (YY/Y)	S2H80M4-8C	Aluminium	0.60	0.80	1430	2.10	3.90	4.9	-	2.4	-	6.7	70.70	-	-	0.59	0.00205	8.6	54
	S2H80M4-8D	Aluminium	0.80	1.07	1432	1.80	5.30	6.4	-	2.5	-	3.3	78.20	-	-	0.83	0.00216	10.2	54
	S2H90S4-8B	Aluminium	1.20	1.60	1430	2.70	8.03	5.6	-	2.1	-	2.7	85.50	-	-	0.82	0.00205	17.4	55
	S2H90L4-8C	Aluminium	1.60	2.13	1427	3.45	10.67	5.5	-	2.0	-	2.5	82.80	-	-	0.85	0.00267	19.5	54
	S2H100L4-8B	Aluminium	2.00	2.67	1465	5.25	13.07	7.5	-	3.2	-	4.2	83.60	-	-	0.70	0.00521	25.6	46
	S2H100L4-8C	Aluminium	2.80	3.73	1438	5.60	18.60	6.2	-	2.0	-	2.6	84.30	-	-	0.87	0.00694	29.0	46
	S2H112M4-8B	Aluminium	3.80	5.07	1458	7.80	24.90	7.5	-	2.3	-	3.2	84.50	-	-	0.82	0.01085	33.0	60
	S2H132S4-8B	Aluminium	5.00	6.67	1476	10.20	32.50	8.2	-	2.1	-	3.6	85.90	-	-	0.83	0.14136	60.4	59
	S2H132M4-8C	Aluminium	7.20	9.60	1479	14.70	46.40	9.2	-	2.1	-	4.2	88.70	-	-	0.81	0.03560	66.4	63
	S2H160M4-8B	Aluminium	11.00	14.67	1476	22.50	71.20	6.4	-	2.3	-	2.9	89.80	-	-	0.80	0.03517	76.6	64
	S2H160L4-8A	Aluminium	14.00	18.67	1475	28.10	90.72	5.4	-	1.8	-	2.3	90.50	-	-	0.81	0.09940	84.0	63
	S2H180M4-8B	Aluminium	17.00	22.67	1484	33.20	109.54	7.8	-	1.9	-	3.2	91.00	-	-	0.83	0.18660	121.0	70
	S2H180L4-8A	Aluminium	20.00	26.67	1484	39.00	128.90	6.7	-	2.0	-	2.7	91.40	-	-	0.83	0.18598	127.5	70
	S2H200L4-8B	Aluminium	28.00	37.33	1487	57.10	181.20	8.7	-	2.7	-	4.0	92.30	-	-	0.80	0.18660	191.6	70
	S2H200L4-8D	Aluminium	30.00	40.00	1489	71.00	193.10	9.2	-	3.1	-	4.3	92.30	-	-	0.75	0.36420	180.6	70
	S2H225S4-8A	Aluminium	37.00	49.33	1483	72.60	236.60	7.1	-	2.2	-	3.2	90.20	-	-	0.81	0.36421	201.0	71
	S2H225M4-8B	Cast Iron	44.00	58.67	1483	85.80	282.40	7.4	-	2.2	-	3.3	93.10	-	-	0.81	0.36421	218.6	71
	S2EP250L4-8D	Cast Iron	55.00	73.33	1488	92.50	352.90	10.2	-	3.3	-	4.5	93.60	-	-	0.92	0.43500	278.2	72
@8 pole 750 rpm																			
400 V (YY/Y)	S2H80M4-8C	Aluminium	0.15	0.20	728	1.00	1.96	-	2.6	-	2.2	6.0	48.40	-	-	0.48	0.00205	8.6	58
	S2H80M4-8D	Aluminium	0.20	0.27															
	S2H90S4-8B	Aluminium	0.30	0.40	705	1.20	4.04	-	2.7	-	1.5	2.0	50.60	-	-	0.59	0.00205	17.4	58
	S2H90L4-8C	Aluminium	0.40	0.53	693	1.40	5.50	-	2.8	-	1.5	2.0	57.20	-	-	0.65	0.00267	19.5	57
	S2H100L4-8B	Aluminium	0.50	0.67	723	2.50	6.60	-	3.0	-	2.4	3.0	61.70	-	-	0.50	0.00521	25.6	54
	S2H100L4-8C	Aluminium	0.70	0.93	707	2.10	9.40	-	3.2	-	1.5	2.0	70.00	-	-	0.67	0.00694	29.0	54
	S2H112M4-8B	Aluminium	1.00	1.33	718	3.10	13.30	-	3.9	-	1.5	2.3	70.80	-	-	0.61	0.01085	33.0	55
	S2H132S4-8B	Aluminium	1.30	1.73	739	4.10	16.80	-	4.2	-	1.5	2.6	75.20	-	-	0.58	0.14136	60.4	62
	S2H132M4-8C	Aluminium	1.80	2.40	737	5.70	23.20	-	5.0	-	1.6	3.2	74.00	-	-	0.55	0.03560	66.4	58
	S2H160M4-8B	Aluminium	3.00	4.00	732	9.10	39.25	-	3.3	-	1.7	2.0	80.00	-	-	0.58	0.03517	76.6	52
	S2H160L4-8A	Aluminium	3.50	4.67	734	10.40	45.56	-	3.6	-	1.8	2.1	80.00	-	-	0.58	0.09940	84.0	66
	S2H180M4-8B	Aluminium	4.30	5.73	739	12.15	55.42	-	4.4	-	1.5	2.3	81.90	-	-	0.60	0.18660	121.0	66
	S2H180L4-8A	Aluminium	5.00	6.67	731	13.30	65.60	-	3.1	-	1.4	1.8	81.40	-	-	0.65	0.18598	127.5	67
	S2H200L4-8B	Aluminium	6.50	8.67	737	17.40	84.05	-	4.4	-	1.6	2.3	85.30	-	-	0.62	0.18660	191.6	73
	S2H200L4-8D	Aluminium	8.00	10.67	738	21.80	103.60	-	4.0	-	1.5	2.1	85.30	-	-	0.62	0.36420	180.6	73
	S2H225S4-8A	Aluminium	9.20	12.27	739	23.20	119.40	-	4.9	-	1.8	2.6	86.10	-	-	0.67	0.36421	201.0	74
	S2H225M4-8B	Cast Iron	11.00	14.67	740	27.20	143.00	-	4.6	-	2.0	2.3	86.90	-	-	0.66	0.36421	218.6	74
	S2EP250L4-8D	Cast Iron	14.70	19.60	740	31.90	193.50	-	7.2	-	2.6	3.0	90.60	-	-	0.75	0.43500	278.2	75

* According to IEC 60034-2-1
** The sound pressure measurements are taken 1m away from the motor
** Tolerance +3 dBA
*** Please contact us for your requests.

THREE PHASE SMOKE EXTRACTION MOTORS

F300 SERIES DIMENSIONS

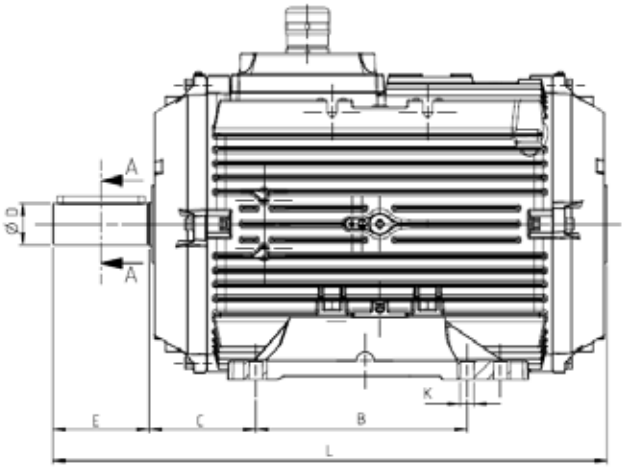

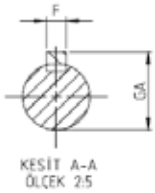

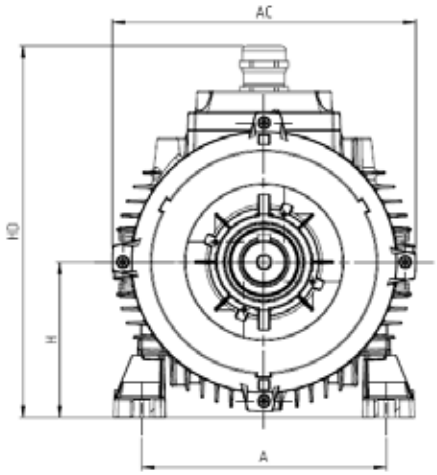

Power (kW)	Number of Poles	Motor Type	Housing Type	Main Dimensions			Foot Mounted Motors						Shaft				Bearing		Seal	
				AC	L	O	B	A	H	HD	K	C	D	E	GA	F	Drive Side	Non drive Side	Drive Side	Non drive Side
0,75	2	S3H80M2C	Aluminium	172,50	263,00	M20	100	125	80	212	10,00	50,00	19	40	21,5	6	6204 ZZ C4	6204 ZZ C4	20*30*7	-
1,10	2	S3H80M2D	Aluminium	172,50	263,00	M20	100	125	80	212	10,00	50,00	19	40	21,5	6	6204 ZZ C4	6204 ZZ C4	20*30*7	-
1,50	2	S3H90L2C	Aluminium	188,00	308,00	M25	100	140	90	238	10,00	56,00	24	50	27	8	6305 ZZ C4	6205 ZZ C4	25*40*7	-
2,20	2	S3H90L2D	Aluminium	188,00	308,00	M25	100	140	90	238	10,00	56,00	24	50	27	8	6305 ZZ C4	6205 ZZ C4	25*40*7	-
3,00	2	S3H100L2D	Aluminium	196,00	348,00	M25	140	160	100	257	12,00	63,00	28	60	31	8	6306 ZZ C4	6205 ZZ C4	30*47*7	-
4,00	2	S3H112M2C	Aluminium	225,00	355,00	M25	140	190	112	277	12,00	70,00	28	60	31	8	6306 ZZ C4	6206 ZZ C4	30*47*7	-
5,50	2	S3H132S2C	Aluminium	260,00	430,00	M32	140	216	132	323	12,00	89,00	38	80	41	10	6208 ZZ C4	6208 ZZ C4	40*62*10	-
7,50	2	S3H132S2D	Aluminium	260,00	430,00	M32	140	216	132	323	12,00	89,00	38	80	41	10	6208 ZZ C4	6208 ZZ C4	40*62*10	-
11,00	2	S3H160M2C	Aluminium	314,00	538,50	M32	210	254	160	374	14,50	108,00	42	110	45	12	6309 ZZ C4	6209 ZZ C4	45*72*10	-
15,00	2	S3H160M2D	Aluminium	314,00	538,50	M32	210	254	160	374	14,50	108,00	42	110	45	12	6309 ZZ C4	6209 ZZ C4	45*72*10	-
18,50	2	S3H160L2C	Aluminium	314,00	538,50	M32	210	254	160	374	14,50	108,00	42	110	45	12	6309 ZZ C4	6209 ZZ C4	45*72*10	-
22,00	2	S3H180M2A	Aluminium	346,00	632,00	M40	241	279	180	430	14,50	121,00	48	110	51,5	14	6310 ZZ C4	6310 ZZ C4	50*80*10	-
30,00	2	S3H200L2C	Aluminium	388,00	692,00	M40	267	318	200	450	18,50	133,00	55	110	59	16	6310 ZZ C4	6312 ZZ C4	50*80*10	-
37,00	2	S3H200L2D	Aluminium	388,00	692,00	M40	267	318	200	450	18,50	133,00	55	110	59	16	6310 ZZ C4	6312 ZZ C4	50*80*10	-
45,00	2	S3H225M2B	Aluminium	442,00	665,00	M40	286	356	225	500	18,50	149,00	55	110	59	16	6313 ZZ C4	6313 ZZ C4	65*100*13	-
55,00	2	S3EP250M2B	Aluminium	522,00	795,00	M50	311	406	250	578	24,00	168,00	60	140	64	18	6316 Z C4	6316 Z C4	80*100*10	-
75,00	2	S3H280M2C	Aluminium	550,00	929,00	M50	368	457	280	612	24,00	190,00	65	140	69	18	6316 Z C4	6316 Z C4	80*100*10	-
90,00	2	S3EP280M2D	Aluminium	550,00	929,00	M50	368	457	280	612	24,00	190,00	65	140	69	18	6316 Z C4	6316 Z C4	80*100*10	-
0,55	4	S3H80M4C	Aluminium	172,50	263,00	M20	100	125	80	212	10,00	50,00	19	40	21,5	6	6204 ZZ C4	6204 ZZ C4	20*30*7	-
0,75	4	S3H80M4D	Aluminium	158,00	263,00	M20	100	125	80	216	10,00	50,00	19	40	21,5	6	6204 ZZ C4	6204 ZZ C4	20*30*7	-
1,10	4	S3H90L4C	Aluminium	188,00	308,00	M25	100	140	90	238	10,00	56,00	24	50	27	8	6305 ZZ C4	6205 ZZ C4	25*40*7	-
1,50	4	S3H90L4D	Aluminium	188,00	346,00	M25	100	140	90	238	10,00	56,00	24	50	27	8	6305 ZZ C4	6205 ZZ C4	25*40*7	-
2,20	4	S3H100L4C	Aluminium	196,00	348,00	M25	140	160	100	257	12,00	63,00	28	60	31	8	6205 ZZ C4	6306 ZZ C4	30*47*7	-
3,00	4	S3H100L4D	Aluminium	196,00	348,00	M25	140	160	100	257	12,00	63,00	28	60	31	8	6205 ZZ C4	6306 ZZ C4	30*47*7	-
4,00	4	S3H112M4D	Aluminium	225,00	381,00	M25	140	190	112	277	12,00	70,00	28	60	31	8	6206 ZZ C4	6306 ZZ C4	30*47*7	-
5,50	4	S3H132S4B	Aluminium	260,00	430,00	M32	140	216	132	323	12,00	89,00	38	80	41	10	6208 ZZ C4	6208 ZZ C4	40*62*10	-
7,50	4	S3H132M4D	Aluminium	260,00	490,00	M32	140-178	216	132	312	12,00	89,00	38	80	41	10	6208 ZZ C4	6208 ZZ C4	40*62*10	-
11,00	4	S3H160L4A	Aluminium	314,00	538,50	M32	210	254	160	374	14,50	108,00	42	110	45	12	6309 ZZ C4	6208 ZZ C4	45*72*10	-

THREE PHASE SMOKE EXTRACTION MOTORS

Power [kW]	Number of Poles	Motor Type	Housing Type	Main Dimensions			Foot Mounted Motors						Shaft				Bearing		Seal	
				AC	L	O	B	A	H	HD	K	C	D	E	GA	F	Drive Side	Non drive Side	Drive Side	Non drive Side
15,00	4	S3H160L4B	Aluminium	314,00	538,50	M32	210	254	160	374	14,50	108,00	42	110	45	12	6309 ZZ C4	6209 ZZ C4	45*72*10	-
18,50	4	S3H180M4B	Aluminium	346,00	632,00	M40	241	279	180	430	14,50	121,00	48	110	51,5	14	6310 ZZ C4	6310 ZZ C4	50*80*10	-
22,00	4	S3H180L4B	Aluminium	346,00	682,00	M40	241	279	180	430	14,50	121,00	48	110	51,5	14	6310 ZZ C4	6310 ZZ C4	50*80*10	-
30,00	4	S3H200L4D	Aluminium	388,00	692,00	M40	267	318	200	450	18,50	133,00	55	110	59	16	6310 ZZ C4	6312 ZZ C4	50*80*10	-
37,00	4	S3H225S4B	Aluminium	442,00	695,00	M40	286	356	225	500	18,50	149,00	60	140	64	18	6313 ZZ C4	6313 ZZ C4	65*100*13	-
45,00	4	S3H225M4C	Aluminium	442,00	695,00	M40	286	356	225	500	18,50	149,00	60	140	64	18	6313 ZZ C4	6313 ZZ C4	65*100*13	-
55,00	4	S3EP250M4E	Aluminium	522,00	795,00	M50	311	406	250	578	24,00	168,00	65	140	69	18	6316 Z C4	6316 Z C4	80*100*10	-
75,00	4	S3EP280M4D	Aluminium	550,00	929,00	M50	368	457	280	612	24,00	190,00	75	140	79,5	20	6316 Z C4	6316 Z C4	80*100*10	-
0,20-0,80	2-4	S2H80M2-4A	Aluminium	173,00	238,00	M20	100	125	80	213	10,00	50,00	19	40	21,5	6	6204 ZZ C4	6204 ZZ C4	20*30*7	-
0,25-1,10	2-4	S2H80M2-4B	Aluminium	173,00	263,00	M20	100	125	80	213	10,00	50,00	19	40	21,5	6	6204 ZZ C4	6204 ZZ C4	20*30*7	-
0,37-1,50	2-4	S2H90S2-4B	Aluminium	189,00	308,00	M25	100	140	90	238	10,00	56,00	24	50	27	8	6305 ZZ C4	6205 ZZ C4	25*40*7	-
0,50-2,20	2-4	S2H90L2-4C	Aluminium	189,00	308,00	M25	100	140	91	238	10,00	56,00	24	50	27	8	6305 ZZ C4	6205 ZZ C4	25*40*7	-
0,65-2,50	2-4	S2H100L2-4B	Aluminium	206,00	348,00	M25	140	160	100	257	12,00	63,00	28	60	31	8	6306 ZZ C4	6205 ZZ C4	30*47*7	-
0,80-3,10	2-4	S2H100L2-4D	Aluminium	206,00	348,00	M25	140	160	100	257	12,00	63,00	28	60	31	8	6306 ZZ C4	6205 ZZ C4	30*47*7	-
1,10-4,40	2-4	S2H112M2-4D	Aluminium	228,00	380,00	M25	140	190	112	277	12,00	70,00	28	60	31	8	6306 ZZ C4	6205 ZZ C4	30*47*7	-
1,50-6,00	2-4	S2H132S2-4B	Aluminium	291,00	490,00	M32	140	216	132	323	12,00	89,00	38	80	41	10	6208 ZZ C4	6208 ZZ C4	40*62*10	-
2,00-8,00	2-4	S2H132M2-4D	Aluminium	291,00	490,00	M32	140	216	132	323	12,00	89,00	38	80	41	10	6208 ZZ C4	6208 ZZ C4	40*62*10	-
3,00-12,00	2-4	S2H160M2-4B	Aluminium	345,00	538,00	M32	210	254	160	374	14,50	108,00	42	110	45	12	6309 ZZ C4	6209 ZZ C4	45*72*10	-
4,00-16,00	2-4	S2H160L2-4B	Aluminium	345,00	568,00	M32	210	254	160	374	14,50	108,00	42	110	45	12	6309 ZZ C4	6209 ZZ C4	45*72*10	-
6,30-25,00	2-4	S2H180L2-4B	Aluminium	346,00	683,00	M40	241	279	180	430	15,00	121,50	48	110	51,5	14	6310 ZZ C4	6310 ZZ C4	50*80*10	-
5,00-20,00	2-4	S2H180L2-4C	Aluminium	346,00	683,00	M40	241	279	180	430	15,00	121,50	48	110	51,5	14	6310 ZZ C4	6310 ZZ C4	50*80*10	-
8,50-33,00	2-4	S2H200L2-4B	Aluminium	346,00	692,00	M40	267	318	200	450	18,50	133,00	55	110	59	16	6312 ZZ C4	6310 ZZ C4	60*90*10	-
9,00-37,00	2-4	S2H225M2-4C	Aluminium	442,00	695,00	M40	286	356	225	500	18,50	149,00	60	140	64	18	6313 ZZ C4	6313 ZZ C4	65*100*13	-
12,00-46,00	2-4	S2H225M2-4D	Aluminium	442,00	695,00	M40	286	356	225	500	18,50	149,00	60	140	64	18	6313 ZZ C4	6313 ZZ C4	65*100*13	-
15,00-55,00	2-4	S2EP250M2-4C	Cast Iron	522,00	795,00	M50	311	406	250	578	24,00	168,00	65	140	69	18	6316 C4	6316 C4	90*130*10	-
20,00-75,00	2-4	S2EP280M2-4B	Cast Iron	550,00	929,00	M50	368	457	280	612	24,00	190,00	75	140	79,5	20	6316 C4	6316 C4	90*130*10	-
0,15-0,60	4-8	S2H80M4-8C	Aluminium	173,00	263,00	M20	100	125	80	213	10,00	50,00	19	40	21,5	6	6204 ZZ C4	6204 ZZ C4	20*30*7	-
0,20-0,80	4-8	S2H80M4-8D	Aluminium	173,00	263,00	M20	100	125	80	213	10,00	50,00	19	40	21,5	6	6204 ZZ C4	6204 ZZ C4	20*30*7	-
0,30-1,20	4-8	S2H90S4-8B	Aluminium	189,00	308,00	M25	100	140	90	238	10,00	56,00	24	50	27	8	6305 ZZ C4	6205 ZZ C4	25*40*7	-
0,40-1,60	4-8	S2H90L4-8C	Aluminium	189,00	346,00	M25	100	140	90	238	10,00	56,00	24	50	27	8	6305 ZZ C4	6205 ZZ C4	25*40*7	-
0,50-2,00	4-8	S2H100L4-8B	Aluminium	206,00	348,00	M25	140	160	100	257	12,00	63,00	28	60	31	8	6306 ZZ C4	6205 ZZ C4	30*47*7	-
0,70-2,80	4-8	S2H100L4-8C	Aluminium	206,00	348,00	M25	140	160	100	257	12,00	63,00	28	60	31	8	6306 ZZ C4	6205 ZZ C4	30*47*7	-
1,00-3,80	4-8	S2H112M4-8B	Aluminium	228,00	380,00	M25	140	190	112	277	12,00	70,00	28	60	31	8	6306 ZZ C4	6205 ZZ C4	30*47*7	-
1,30-5,00	4-8	S2H132S4-8B	Aluminium	291,00	490,00	M32	140	216	132	323	12,00	89,00	38	80	41	10	6208 ZZ C4	6208 ZZ C4	40*62*10	-
1,80-7,20	4-8	S2H132M4-8C	Aluminium	291,00	490,00	M32	140	216	132	323	12,00	89,00	38	80	41	10	6208 ZZ C4	6208 ZZ C4	40*62*10	-
3,00-11,00	4-8	S2H160M4-8B	Aluminium	345,00	538,00	M32	210	254	160	374	14,50	108,00	42	110	45	12	6309 ZZ C4	6209 ZZ C4	45*72*10	-
3,50-14,00	4-8	S2H160L4-8A	Aluminium	345,00	536,00	M32	210	254	160	374	14,50	108,00	42	110	45	12	6309 ZZ C4	6209 ZZ C4	45*72*10	-
4,30-17,00	4-8	S2H180M4-8B	Aluminium	346,00	632,00	M40	241	279	180	430	15,00	121,50	48	110	51,5	14	6310 ZZ C4	6310 ZZ C4	50*80*10	-
5,00-20,00	4-8	S2H180L4-8A	Aluminium	346,00	632,00	M40	241	279	180	430	15,00	121,50	48	110	51,5	14	6310 ZZ C4	6310 ZZ C4	50*80*10	-
6,50-28,00	4-8	S2H200L4-8B	Aluminium	346,00	692,00	M40	267	318	200	450	18,50	133,00	55	110	59	16	6312 ZZ C4	6310 ZZ C4	60*90*10	-
8,00-30,00	4-8	S2H200L4-8D	Aluminium	346,00	692,00	M40	267	318	200	450	18,50	133,00	55	110	59	16	6312 ZZ C4	6310 ZZ C4	60*90*10	-
9,20-37,00	4-8	S2H225S4-8A	Aluminium	442,00	695,00	M40	286	356	225	500	18,50	149,00	60	140	64	18	6313 ZZ C4	6313 ZZ C4	65*100*13	-
11,00-44,00	4-8	S2H225M4-8B	Cast Iron	442,00	695,00	M40	286	356	225	500	18,50	149,00	60	140	64	18	6313 ZZ C4	6313 ZZ C4	65*100*13	-
14,70-55,00	4-8	S2EP250L4-8D	Cast Iron	522,00	795,00	M50	311	406	250	578	24,00	168,00	65	140	69	18	6316 C4	6316 C4	90*130*10	-

THREE PHASE SMOKE EXTRACTION MOTORS

F300 PAD MOUNT SERIES DIMENSIONS

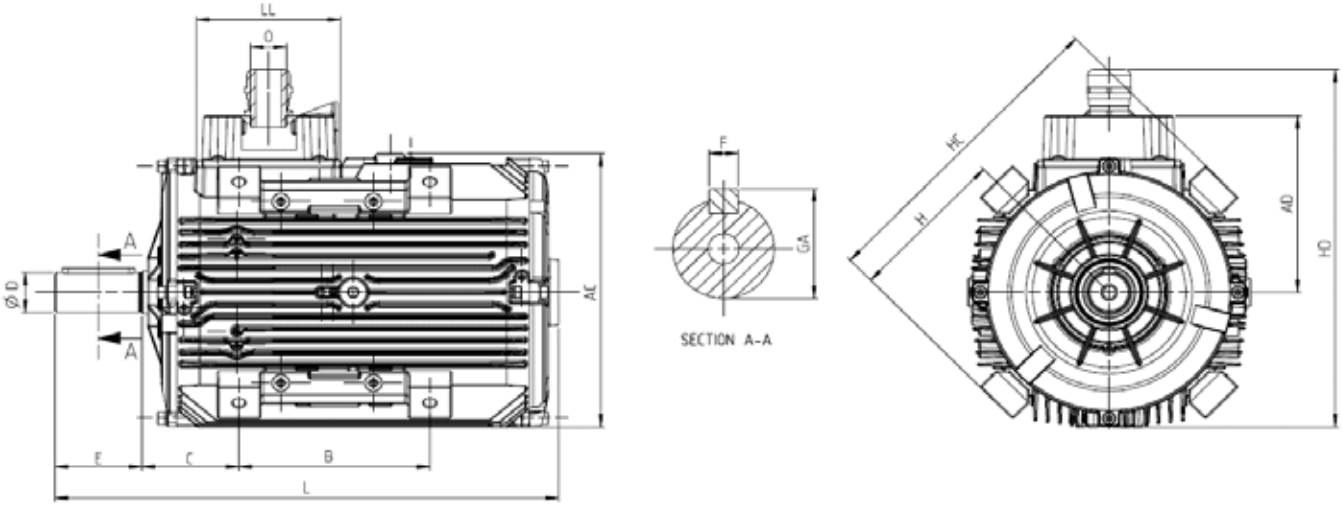

Power (kW)	Number of Poles	Motor Type	Housing Type	Main Dimensions				Mount and Terminal Box Size				Shaft				Bearing		Seal	
				AC	L	HD	O	LL	AD	H	HC	D	E	GA	F	Drive Side	Non drive Side	Drive Side	Non drive Side
0,75	2	S2HPM80M2B40-KG	Aluminium	154	238	210	M20	85	105	95,00	189	19	40	21,5	6	6204 ZZ C4	6204 ZZ C4	20*30*7	-
1,10	2	S2HPM80M2C40-KG	Aluminium	154	263	210	M20	85	105	95,00	189	19	40	21,5	6	6204 ZZ C4	6204 ZZ C4	20*30*7	-
1,50	2	S2HPM90S2B40-KG	Aluminium	171	308	234	M25	100	115	100,00	199	24	50	27	8	6305 ZZ C4	6205 ZZ C4	25*40*7	-
2,20	2	S2HPM90L2C40-KG	Aluminium	171	308	234	M25	100	115	100,00	199	24	50	27	8	6305 ZZ C4	6205 ZZ C4	25*40*7	-
3,00	2	S2HPM100L2C40-KG	Aluminium	193	348	252	M25x1	100	125	110,50	221	28	60	31	8	6306 ZZ C4	6205 ZZ C4	30*47*7	-
1,10	4	S2HPM90S4B40-KG	Aluminium	171	308	234	M25	100	115	100,00	199	24	50	27	8	6305 ZZ C4	6205 ZZ C4	25*40*7	-
2,20	4	S2HPM100L4B40-KG	Aluminium	193	348	252	M25	100	125	110,50	221	28	60	31	8	6306 ZZ C4	6205 ZZ C4	30*47*7	-
1,50	4	S2HPM90L4C40-KG	Aluminium	171	308	234	M25	100	115	100,00	199	24	50	27	8	6305 ZZ C4	6205 ZZ C4	25*40*7	-
3,00	4	S2HPM100L4C40-KG	Aluminium	193	348	252	M25	100	125	110,50	221	28	60	31	8	6306 ZZ C4	6205 ZZ C4	30*47*7	-
0,75	4	S2HPM80M4B40-KG	Aluminium	154	238	210	M20	85	105	95,00	191	19	40	21,5	6	6204 ZZ C4	6204 ZZ C4	20*30*7	-
0,55	4	S2HPM80M4C40-KG	Aluminium	154	263	210	M20	85	105	95,00	189	19	40	21,5	6	6204 ZZ C4	6204 ZZ C4	20*30*7	-
0,20/0,80	2-4	S2HPM80M2-4A40-KG	Aluminium	154	238	210	M20	85	105	95,00	189	19	40	21,5	6	6204 ZZ C4	6204 ZZ C4	20*30*7	-
0,25/1,10	2-4	S2HPM80M2-4B40-KG	Aluminium	154	263	210	M20	85	105	95,00	189	19	40	21,5	6	6204 ZZ C4	6204 ZZ C4	20*30*7	-
0,37/1,50	2-4	S2HPM90S2-4B40-KG	Aluminium	172	308	234	M25	100	115	100,00	199	24	50	27	8	6305 ZZ C4	6205 ZZ C4	25*40*7	-
0,50/2,20	2-4	S2HPM90L2-4C40-KG	Aluminium	172	308	234	M25	100	115	100,00	199	24	50	27	8	6305 ZZ C4	6205 ZZ C4	25*40*7	-
0,65/2,50	2-4	S2HPM100L2-4B40-KG	Aluminium	193	348	252	M25	100	125	110,50	221	28	60	31	8	6306 ZZ C4	6205 ZZ C4	30*47*7	-
0,80/3,10	2-4	S2HPM100L2-4D40-KG	Aluminium	193	348	252	M25	100	125	110,50	221	28	60	31	8	6306 ZZ C4	6205 ZZ C4	30*47*7	-
0,15/0,60	4-8	S2HPM80M4-8C40-KG	Aluminium	154	263	210	M20	85	105	95,00	189	19	40	21,5	6	6204 ZZ C4	6204 ZZ C4	20*30*7	-
0,20/0,80	4-8	S2HPM80M4-8D40-KG	Aluminium	154	263	210	M20	85	105	95,00	189	19	40	21,5	6	6204 ZZ C4	6204 ZZ C4	20*30*7	-
0,30/1,20	4-8	S2HPM90S4-8B40-KG	Aluminium	172	308	234	M25	100	115	100,00	199	24	50	27	8	6305 ZZ C4	6205 ZZ C4	25*40*7	-
0,40/1,60	4-8	S2HPM90L4-8C40-KG	Aluminium	172	346	234	M25	100	115	100,00	199	24	50	27	8	6305 ZZ C4	6205 ZZ C4	25*40*7	-
0,55/2,20	4-8	S2HPM100L4-8B40-KG	Aluminium	193	348	252	M25	100	125	110,50	221	28	60	31	8	6306 ZZ C4	6205 ZZ C4	30*47*7	-
0,70/2,80	4-8	S2HPM100L4-8C40-KG	Aluminium	193	348	252	M25	100	125	110,50	221	28	60	31	8	6306 ZZ C4	6205 ZZ C4	30*47*7	-

IE3-IE4 THREE PHASE SMOKE EXTRACTION MOTORS

F400 SERIES ELECTRICAL CHARACTERISTICS @ 50 Hz

	MOTOR TYPE	HOUSING TYPE	RATED VALUES					STARTING VALUES				Breakdown Torque Ratio	EFFICIENCY *			Cosφ	J	Weight (B3)	Sound Pressure Level
			Power		SPEED	CURRENT	TORQUE	CURRENT IA / IN		TORQUE MA / MN			η %						
			kW	HP	rpm	A	Nm	λ	Δ	λ	Δ	Mk/ Mn	4/4	3/4	2/4	4/4	kgm²	kg	dBA**
2 pole 3000 rpm																			
230/400 V	S3HG80M2C	Cast Iron	0.75	1.00	2893	2.80/1.60	2.47	8.60	-	3.8	-	4.20	80.7	79.5	75.8	0.86	0.00140	19	57
230/400 V	S3HG80M2D	Cast Iron	1.10	1.50	2902	4.150/2.40	3.62	9.10	-	3.8	-	4.30	82.7	80.2	76.4	0.85	0.00170	22	57
230/400 V	S3HG90L2C	Cast Iron	1.50	2.00	2930	5.50/3.10	4.90	9.50	-	3.1	-	4.30	84.2	86.2	84.2	0.86	0.00249	26	62
230/400 V	S3HG90L2D	Cast Iron	2.20	3.00	2928	7.40/4.30	7.20	10.00	-	3.2	-	4.30	85.9	85.0	83.0	0.86	0.00283	30	62
230/400 V	S3HG100L2D	Cast Iron	3.00	4.00	2932	9.50/5.50	9.70	11.50	-	4.1	-	5.00	87.1	86.5	85.1	0.90	0.00536	39	63
400/690	S3HG112M2C	Cast Iron	4.00	5.50	2918	7.50/4.30	13.10	-	10.00	-	3.30	4.10	88.1	87.3	85.4	0.93	0.00604	52	67
400/690	S3HG132S2C	Cast Iron	5.50	7.50	2922	11.10/6.40	18.00	-	8.40	-	3.00	4.40	89.2	89.0	88.5	0.88	0.02792	56	69
400/690	S3HG132S2D	Cast Iron	7.50	10.00	2929	14.50/8.40	24.35	-	13.70	-	8.30	10.70	90.1	89.0	88.5	0.88	0.03091	63	69
400/690	S3HG160M2C	Cast Iron	11.00	15.00	2965	20.10/11.60	35.60	-	11.00	-	3.50	5.20	91.2	88.1	83.2	0.93	0.03517	84	70
400/690	S3HG160M2D	Cast Iron	15.00	20.00	2967	26.40/15.25	48.40	-	10.50	-	3.30	4.95	91.9	90.3	87.9	0.88	0.04322	108	70
400/690	S3HG160L2C	Cast Iron	18.50	25.00	2971	32.90/19.00	59.00	-	11.50	-	3.80	5.50	92.4	90.7	88.0	0.84	0.04809	132	70
400/690	S3HG180M2A	Cast Iron	22.00	30.00	2969	39.50/22.80	70.70	-	9.18	-	2.77	4.24	92.7	91.9	91.7	0.90	0.09460	155	77
400/690	S3HG200L2C	Cast Iron	30.00	40.00	2973	51.20/29.50	96.40	-	10.20	-	3.00	4.70	93.3	92.8	91.8	0.91	0.10277	206	78
400/690	S3HG200L2D	Cast Iron	37.00	50.00	2968	61.60/35.50	119.20	-	9.50	-	2.85	4.10	93.7	93.7	93.1	0.92	0.11383	221	78
400/690	S3HG225M2B	Cast Iron	45.00	60.00	2981	77.70/44.90	145.20	-	11.01	-	3.35	4.56	94.0	93.9	93.7	0.89	0.23500	314	80
400/690	S3HG250M2B	Cast Iron	55.00	75.00	2982	93.60/54.00	176.10	-	11.90	-	4.10	4.30	94.3	93.6	92.1	0.87	0.48700	332	80
400/690	S4HG280M2C	Cast Iron	75.00	100.00	2982	124.20/71.80	240.00	-	6.70	-	2.60	3.00	95.6	95.6	94.9	0.92	1.17890	653	79
400/690	S4HG280M2D	Cast Iron	90.00	125.00	2985	146.70/84.80	288.20	-	7.80	-	2.90	5.70	95.8	95.7	94.9	0.92	1.26380	680	79
400/690	S4HG315S2C	Cast Iron	110.00	150.00	2988	193.90/111.90	352.10	-	10.80	-	3.60	5.20	96.0	95.4	94.2	0.85	1.66000	880	87
400/690	S4HG315M2B	Cast Iron	132.00	180.00	2986	228.20/131.90	422.50	-	9.00	-	3.80	10.40	96.2	96.1	92.5	0.88	1.84000	952	87
400/690	S4HG315L2A	Cast Iron	160.00	215.00	2990	290.60/168.00	511.10	-	12.10	-	6.70	13.40	96.3	95.8	94.5	0.84	2.05000	1010	87
400/690	S4HG315L2C	Cast Iron	200.00	270.00	2983	331.00/191.20	644.00	-	9.40	-	4.40	8.68	96.5	96.6	95.9	0.89	2.30000	1144	87
4 pole 1500 rpm																			
230/400 V	S3HG80M4C	Cast Iron	0.55	0.75	1452	2.40/1.40	3.60	6.20	-	2.8	-	3.50	80.8	78.2	77.1	0.74	0.00190	19	57
230/400 V	S3HG80M4D	Cast Iron	0.75	1.00	1460	3.30/1.90	4.91	7.90	-	3.1	-	4.00	82.5	80.4	77.1	0.72	0.00261	19	52
230/400 V	S3HG90L4C	Cast Iron	1.10	1.50	1443	4.50/2.60	7.30	7.40	-	3.6	-	4.10	84.1	81.0	77.3	0.77	0.00464	29	53
230/400 V	S3HG90L4D	Cast Iron	1.50	2.00	1450	5.90/3.40	9.80	8.00	-	3.6	-	4.20	85.3	84.9	82.0	0.76	0.00526	30	53
230/400 V	S3HG100L4C	Cast Iron	2.20	3.00	1458	9.20/5.30	14.40	8.50	-	4.0	-	4.70	86.7	85.4	83.5	0.80	0.00871	41	56
230/400 V	S3HG100L4D	Cast Iron	3.00	4.00	1453	11.20/6.50	19.60	8.70	-	3.7	-	4.30	87.7	86.1	84.4	0.78	0.01059	45	56
400/690 V	S3HG112M4D	Cast Iron	4.00	5.50	1462	8.50/4.90	26.20	-	9.20	-	3.70	4.30	88.6	87.3	86.4	0.79	0.01383	56	54
400/690 V	S3HG132S4B	Cast Iron	5.50	7.50	1475	11.30/6.50	35.30	-	8.20	-	2.40	3.75	89.6	87.3	85.0	0.81	0.03560	68	60
400/690 V	S3HG132M4D	Cast Iron	7.50	10.00	1474	15.40/8.90	48.60	-	8.30	-	2.40	3.70	90.4	90.0	88.7	0.81	0.04030	87	60
400/690 V	S3HG160M4C	Cast Iron	11.00	15.00	1481	22.80/13.20	71.10	-	7.50	-	2.80	3.30	91.4	91.0	89.8	0.78	0.05940	125	62
400/690 V	S3HG160L4B	Cast Iron	15.00	20.00	1480	30.60/17.70	97.30	-	6.50	-	2.30	2.90	92.1	91.4	90.1	0.80	0.09005	137	62
400/690 V	S3HG180M4B	Cast Iron	18.50	25.00	1485	36.00/20.80	119.00	-	8.50	-	2.80	3.70	92.6	91.8	90.3	0.84	0.18660	163	67
400/690 V	S3HG180L4B	Cast Iron	22.00	30.00	1486	43.50/25.10	141.40	-	9.00	-	2.40	4.00	93.0	92.6	91.5	0.80	0.18660	205	68
400/690 V	S3HG200L4D	Cast Iron	30.00	40.00	1484	60.60/35.00	193.40	-	7.80	-	2.60	3.60	93.6	93.8	93.6	0.78	0.22166	263	68
400/690 V	S3HG225S4B	Cast Iron	37.00	50.00	1486	70.20/40.50	238.20	-	8.30	-	3.10	4.20	93.9	93.4	92.5	0.84	0.36400	323	71
400/690 V	S3HG225M4C	Cast Iron	45.00	60.00	1485	81.40/47.00	282.20	-	8.10	-	2.90	3.40	94.2	93.9	93.7	0.85	0.43500	355	71
400/690 V	S3HG250M4B	Cast Iron	55.00	75.00	1485	106.80/61.70	355.30	-	7.80	-	3.10	3.50	94.6	94.2	93.8	0.82	0.90800	383	71
400/690 V	S4HG280M4C	Cast Iron	75.00	100.00	1492	127.90/73.90	480.50	-	5.90	-	1.70	4.30	96.0	95.8	95.1	0.89	1.72100	694	70
400/690 V	S4HG280M4D	Cast Iron	90.00	125.00	1492	153.10/88.50	576.60	-	7.90	-	2.40	3.40	96.1	96.0	95.2	0.88	1.84140	694	70
400/690 V	S4HG315S4C	Cast Iron	110.00	150.00	1494	191.80/110.90	704.20	-	8.50	-	3.50	6.60	96.3	95.5	95.7	0.87	3.42000	971	83
400/690 V	S4HG315M4B	Cast Iron	132.00	180.00	1491	229.40/132.60	845.30	-	8.70	-	3.30	8.55	96.4	95.9	95.0	0.86	3.85000	1016	83
400/690 V	S4HG315L4A	Cast Iron	160.00	215.00	1492	280.50/162.10	964.10	-	9.50	-	4.80	5.65	96.6	95.8	95.2	0.86	4.66000	1156	83
400/690 V	S4HG315L4C	Cast Iron	200.00	270.00	1488	332.00/191.70	1281.80	-	7.40	-	3.60	4.25	96.7	96.4	96.3	0.89	4.66000	1167	83

* According to IEC 60034-2-1
** The sound pressure measurements are taken 1m away from the motor
** Tolerance +3 dBA

IE3-IE4 THREE PHASE SMOKE EXTRACTION MOTORS

F400 SERIES ELECTRICAL CHARACTERISTICS @ 60 Hz

	MOTOR TYPE	HOUSING TYPE	RATED VALUES					STARTING VALUES				Breakdown Torque Ratio	EFFICIENCY *			Cosφ	J	Weight (B3)	Sound Pressure Level
			Power		SPEED	CURRENT	TORQUE	CURRENT IA / IN		TORQUE MA / MN			η %						
			kW	HP	rpm	A	Nm	⅄	Δ	⅄	Δ	Mk/ Mn	4/4	3/4	2/4	4/4	kgm²	kg	dBA**
2 pole 3600 rpm																			
265/460 V	S3HG80M2C	Cast Iron	0,75	1,00	3501	2,70/1,60	2,05	8,0	-	3,1	-	3,9	77,0	75,9	72,3	0,86	0,00140	19	57
265/460 V	S3HG80M2D	Cast Iron	1,10	1,50	3512	3,60/2,10	2,92	8,6	-	3,6	-	4,1	84,0	81,5	77,6	0,83	0,00170	22	57
265/460 V	S3HG90L2C	Cast Iron	1,50	2,00	3534	4,80/2,80	4,10	9,0	-	2,9	-	4,1	85,5	87,5	85,5	0,85	0,00249	26	62
265/460 V	S3HG90L2D	Cast Iron	2,20	3,00	3568	6,80/3,90	5,90	9,5	-	3,0	-	4,1	86,5	85,6	83,6	0,85	0,00283	30	62
265/460 V	S3HG100L2D	Cast Iron	3,00	4,00	3536	8,50/5,00	8,10	10,9	-	3,9	-	4,8	87,1	86,5	85,1	0,89	0,00536	39	63
460/795 V	S3HG112M2C	Cast Iron	4,00	5,50	-	-	-	-	-	-	-	-	-	-	-	-	-	-	-
460/795 V	S3HG132S2C	Cast Iron	5,50	7,50	3528	9,70/5,60	14,90	-	7,98	-	3,3	5,8	89,5	89,8	89,0	0,86	0,02792	56	69
460/795 V	S3HG132S2D	Cast Iron	7,50	10,00	3531	13,10/7,60	20,30	-	13,02	-	7,9	10,2	90,2	89,8	89,0	0,87	0,03091	63	69
460/795 V	S3HG160M2C	Cast Iron	11,00	15,00	3572	18,50/10,60	29,40	-	10,45	-	3,3	4,9	91,0	86,5	82,1	0,93	0,03517	84	70
460/795 V	S3HG160M2D	Cast Iron	15,00	20,00	3570	24,70/14,20	40,10	-	9,98	-	3,1	4,7	91,0	90,2	87,7	0,88	0,04322	108	70
460/795 V	S3HG160L2C	Cast Iron	18,50	25,00	3572	30,70/17,70	49,50	-	10,93	-	4,2	7,2	91,7	91,5	89,5	0,84	0,04809	132	70
460/795 V	S3HG180M2A	Cast Iron	22,00	30,00	3570	34,90/20,00	58,80	-	8,72	-	2,6	4,0	91,7	91,0	90,4	0,90	0,09460	155	77
460/795 V	S3HG200L2C	Cast Iron	30,00	40,00	3574	46,00/26,50	80,20	-	9,69	-	2,9	4,5	92,4	91,9	90,7	0,90	0,10277	206	78
460/795 V	S3HG200L2D	Cast Iron	37,00	50,00	3569	56,00/32,30	98,90	-	9,03	-	2,7	3,9	93,0	93,0	92,4	0,91	0,11383	221	78
460/795 V	S3HG225M2B	Cast Iron	45,00	60,00	3580	70,10/40,40	119,90	-	10,46	-	3,2	4,3	93,6	93,1	92,4	0,88	0,23500	314	80
460/795 V	S3HG250M2B	Cast Iron	55,00	75,00	3580	86,20/49,80	147,20	-	11,31	-	3,9	4,1	93,6	93,2	92,6	0,86	0,48700	332	80
460/795 V	S4HG280M2C	Cast Iron	75,00	100,00	3584	107,40/61,90	200,50	-	7,30	-	2,8	5,9	95,0	94,5	93,2	0,93	1,17890	653	82
460/795 V	S4HG280M2D	Cast Iron	90,00	125,00	3586	128,40/74,20	239,80	-	8,50	-	3,5	7,7	95,4	95,0	93,7	0,92	1,26380	680	82
460/795 V	***S4HG315S2C	Cast Iron	110,00	150,00	-	-	-	-	-	-	-	-	-	-	-	-	-	-	-
460/795 V	***S4HG315M2B	Cast Iron	132,00	180,00	-	-	-	-	-	-	-	-	-	-	-	-	-	-	-
460/795 V	***S4HG315L2A	Cast Iron	160,00	215,00	-	-	-	-	-	-	-	-	-	-	-	-	-	-	-
460/795 V	***S4HG315L2C	Cast Iron	200,00	270,00	-	-	-	-	-	-	-	-	-	-	-	-	-	-	-
4 pole 1800 rpm																			
265/460 V	S3HG80M4C	Cast Iron	0,55	0,75	1755	2,30/1,30	3,00	5,9	-	2,7	-	3,3	81,1	79,3	76,3	0,72	0,00190	19	57
265/460 V	S3HG80M4D	Cast Iron	0,75	1,00	1758	3,00/1,75	4,13	7,5	-	2,9	-	3,8	83,5	81,0	79,0	0,70	0,00261	19	52
265/460 V	S3HG90L4C	Cast Iron	1,10	1,50	1720	4,30/2,50	6,00	7,0	-	3,4	-	3,9	86,5	85,6	82,9	0,82	0,00464	29	53
265/460 V	S3HG90L4D	Cast Iron	1,50	2,00	1755	5,40/3,10	8,20	7,6	-	3,4	-	4,0	86,5	86,1	83,2	0,73	0,00526	30	53
265/460 V	S3HG100L4C	Cast Iron	2,20	3,00	-	-	-	-	-	-	-	-	-	-	-	-	-	-	-
265/460 V	S3HG100L4D	Cast Iron	3,00	4,00	1755	9,90/5,70	16,30	8,3	-	4,1	-	5,7	89,5	88,2	86,1	0,79	0,01059	45	56
460/795 V	S3HG112M4D	Cast Iron	4,00	5,50	1775	7,50/4,30	21,50	-	8,74	-	3,5	4,1	89,5	88,6	87,8	0,77	0,01383	56	54
460/795 V	S3HG132S4B	Cast Iron	5,50	7,50	1777	9,90/5,70	29,60	-	7,79	-	2,3	3,6	91,7	89,8	89,0	0,79	0,03560	68	60
460/795 V	S3HG132M4D	Cast Iron	7,50	10,00	1775	13,60/7,90	40,40	-	7,89	-	2,3	3,5	91,7	91,1	89,9	0,79	0,04030	87	60
460/795 V	S3HG160M4C	Cast Iron	11,00	15,00	1782	20,00/11,60	59,10	-	7,13	-	2,7	3,1	92,4	92,0	89,8	0,77	0,05940	125	62
460/795 V	S3HG160L4B	Cast Iron	15,00	20,00	1781	26,50/15,30	80,40	-	6,18	-	2,2	3,8	93	92,3	91,1	0,78	0,09005	137	62
460/795 V	S3HG180M4B	Cast Iron	18,50	25,00	1787	31,40/18,10	98,80	-	8,08	-	3,1	4,9	93,6	92,1	90,5	0,83	0,18660	163	67
460/795 V	S3HG180L4B	Cast Iron	22,00	30,00	1787	38,20/22,10	117,70	-	8,55	-	2,6	5,3	93,6	93,2	92,1	0,79	0,18660	205	68
460/795 V	S3HG200L4D	Cast Iron	30,00	40,00	1785	52,80/30,50	160,70	-	7,41	-	2,5	3,4	94,1	93,5	92,6	0,78	0,22166	263	68
460/795 V	S3HG225S4B	Cast Iron	37,00	50,00	-	-	-	-	-	-	-	-	-	-	-	-	-	-	-
460/795 V	S3HG225M4C	Cast Iron	45,00	60,00	-	-	-	-	-	-	-	-	-	-	-	-	-	-	-
460/795 V	S3HG250M4E	Cast Iron	55,00	75,00	1785	93,10/53,70	294,40	-	7,41	-	3,0	3,3	95,4	95,1	94,4	0,79	0,90800	383	71
460/795 V	S4HG280M4C	Cast Iron	75,00	100,00	1793	108,80/62,90	400,90	-	7,10	-	2,1	3,3	96,2	96,0	95,3	0,90	1,72100	694	73
460/795 V	S4HG280M4D	Cast Iron	90,00	125,00	1794	146,40/84,60	480,70	-	7,50	-	2,7	4,5	96,2	96,1	95,3	0,80	1,84140	694	73
460/795 V	***S4HG315S4C	Cast Iron	110,00	150,00	-	-	-	-	-	-	-	-	-	-	-	-	-	-	-
460/795 V	***S4HG315M4B	Cast Iron	132,00	180,00	-	-	-	-	-	-	-	-	-	-	-	-	-	-	-
460/795 V	***S4HG315L4A	Cast Iron	160,00	215,00	-	-	-	-	-	-	-	-	-	-	-	-	-	-	-
460/795 V	***S4HG315L4C	Cast Iron	200,00	270,00	-	-	-	-	-	-	-	-	-	-	-	-	-	-	-

* According to IEC 60034-2-1
** The sound pressure measurements are taken 1m away from the motor
** Tolerance +3 dBA
*** Please contact us for your requests.

DOUBLE SPEED THREE PHASE SMOKE EXTRACTION MOTORS

DAHLANDER F400 SERIES 2-4 POLE ELECTRICAL CHARACTERISTICS @ 50 Hz

	MOTOR TYPE	HOUSING TYPE	RATED VALUES					STARTING VALUES				Breakdown Torque Ratio	EFFICIENCY *			Cosφ	J	Weight (B3)	Sound Pressure Level
			Power		SPEED	CURRENT	TORQUE	CURRENT IA / IN		TORQUE MA / MN			η %						
			kW	HP	rpm	A	Nm	λ	Δ	λ	Δ	Mk/ Mn	4/4	3/4	2/4	4/4	kgm²	kg	dBA**
@2 pole 3000 rpm																			
400 V (YY/Y)	S2HG80M2-4A	Cast Iron	0.80		2850	1.75	2.68	4.60	-	2.0	-	2.4	77.40	-	-	0.90	0.00205	15.90	56
400 V (YY/Y)	S2HG80M2-4B	Cast Iron	1.10		2878	2.30	3.60	6.00	-	1.9	-	2.6	79.60	-	-	0.92	0.00205	20.20	54
400 V (YY/Y)	S2HG90S2-4B	Cast Iron	1.50		2843	3.40	5.00	5.60	-	2.2	-	2.5	75.00	-	-	0.93	0.00267	23.80	54
400 V (YY/Y)	S2HG90L2-4C	Cast Iron	2.20		2870	4.50	7.30	6.60	-	2.5	-	2.9	75.00	-	-	0.91	0.00205	29.10	55
400 V (YY/Y)	S2HG100L2-4B	Cast Iron	2.50		2910	5.20	8.20	8.40	-	3.1	-	3.7	83.80	-	-	0.88	0.00521	40.70	70
400 V (YY/Y)	S2HG100L2-4D	Cast Iron	3.10		2918	6.30	10.10	8.70	-	3.0	-	3.7	84.70	-	-	0.93	0.00694	42.00	60
400 V (YY/Y)	S2HG112M2-4D	Cast Iron	4.40		2925	8.50	14.40	9.00	-	3.2	-	3.9	86.20	-	-	0.93	0.01383	54.00	71
400 V (YY/Y)	S2HG132S2-4B	Cast Iron	6.00		2947	12.00	19.50	8.50	-	2.7	-	4.0	87.00	-	-	0.89	0.03560	85.00	73
400 V (YY/Y)	S2HG132M2-4D	Cast Iron	8.00		2924	15.90	26.30	6.60	-	1.9	-	2.6	88.10	-	-	0.91	0.03842	85.00	73
400 V (YY/Y)	S2HG160M2-4B	Cast Iron	12.00		2962	23.00	38.70	9.70	-	3.5	-	5.1	89.70	-	-	0.91	0.03517	136.00	61
400 V (YY/Y)	S2HG160L2-4B	Cast Iron	16.00		2962	29.60	51.60	7.90	-	2.4	-	3.5	90.50	-	-	0.91	0.05940	149.00	62
400 V (YY/Y)	S2HG180L2-4C	Cast Iron	25.00		2975	45.00	80.30	11.10	-	2.2	-	5.5	91.40	-	-	0.88	0.11398	142.00	70
400 V (YY/Y)	S2HG180L2-4B	Cast Iron	20.00		2957	32.80	64.60	7.20	-	2.0	-	3.2	91.40	-	-	0.96	0.14659	131.30	70
400 V (YY/Y)	S2HG200L2-4B	Cast Iron	33.00		2973	66.30	106.00	9.70	-	2.1	-	5.3	91.40	-	-	0.80	0.18598	149.00	70
400 V (YY/Y)	S2HG225M2-4C	Cast Iron	37.00		2969	67.30	119.00	8.60	-	2.9	-	3.8	92.50	-	-	0.91	0.36420	353.00	71
400 V (YY/Y)	S2HG225M2-4D	Cast Iron	46.00		2974	88.60	147.70	8.20	-	2.3	-	5.4	92.90	-	-	0.87	0.43500	364.00	69
400 V (YY/Y)	***S2HG250M2-4C	Cast Iron	-	-	-	-	-	-	-	-	-	-	-	-	-	-	-	-	-
@4 pole 1500 rpm																			
400 V (YY/Y)	S2HG80M2-4A	Cast Iron	0.20		1420	0.49	1.35	-	4.6	-	1.7	2.5	65.9	-	-	0.84	0.00205	15.90	46
400 V (YY/Y)	S2HG80M2-4B	Cast Iron	0.25		1448	0.61	1.60	-	5.3	-	2.0	2.5	68.5	-	-	0.83	0.00205	20.20	44
400 V (YY/Y)	S2HG90S2-4B	Cast Iron	0.37		1420	0.90	2.50	-	4.6	-	1.8	2.4	71.5	-	-	0.87	0.00267	23.80	57
400 V (YY/Y)	S2HG90L2-4C	Cast Iron	0.50		1433	1.10	3.30	-	6.2	-	2.3	2.9	75.4	-	-	0.84	0.00205	29.10	58
400 V (YY/Y)	S2HG100L2-4B	Cast Iron	0.70		1452	1.40	4.27	-	9.4	-	2.4	3.1	78.0	-	-	0.86	0.00521	40.70	58
400 V (YY/Y)	S2HG100L2-4D	Cast Iron	0.80		1448	1.70	5.20	-	6.6	-	2.2	3.1	79.9	-	-	0.87	0.00694	42.00	57
400 V (YY/Y)	S2HG112M2-4D	Cast Iron	1.10		1453	2.15	7.20	-	7.4	-	2.3	3.3	81.4	-	-	0.88	0.01383	54.00	60
400 V (YY/Y)	S2HG132S2-4B	Cast Iron	1.50		1478	3.00	9.70	-	8.2	-	2.1	3.1	82.8	-	-	0.82	0.03560	85.00	63
400 V (YY/Y)	S2HG132M2-4D	Cast Iron	2.00		1467	4.00	13.10	-	5.9	-	1.5	2.7	84.3	-	-	0.87	0.03842	85.00	63
400 V (YY/Y)	S2HG160M2-4B	Cast Iron	3.00		1479	6.30	19.40	-	8.8	-	3.2	4.3	85.5	-	-	0.84	0.03517	136.00	56
400 V (YY/Y)	S2HG160L2-4B	Cast Iron	4.00		1478	7.80	25.90	-	6.6	-	2.2	2.9	86.6	-	-	0.84	0.05940	149.00	58
400 V (YY/Y)	S2HG180L2-4C	Cast Iron	6.30		1485	12.00	40.50	-	9.4	-	2.4	4.7	88.5	-	-	0.85	0.11398	142.00	73
400 V (YY/Y)	S2HG180L2-4B	Cast Iron	5.00		1479	9.00	32.30	-	6.0	-	1.4	2.8	88.3	-	-	0.91	0.14659	131.30	73
400 V (YY/Y)	S2HG200L2-4B	Cast Iron	8.50		1484	15.60	54.70	-	8.9	-	2.2	4.3	91.6	-	-	0.86	0.18598	149.00	73
400 V (YY/Y)	S2HG225M2-4C	Cast Iron	9.00		1486	17.10	57.80	-	7.5	-	2.2	3.7	89.5	-	-	0.88	0.36420	353.00	57
400 V (YY/Y)	S2HG225M2-4D	Cast Iron	12.00		1486	23.00	77.10	-	9.0	-	2.4	4.0	89.4	-	-	0.88	0.43500	364.00	57
400 V (YY/Y)	***S2HG250M2-4C	Cast Iron	-	-	-	-	-	-	-	-	-	-	-	-	-	-	-	-	-

* According to IEC 60034-2-1
** The sound pressure measurements are taken 1m away from the motor
** Tolerance +3 dBA
*** Please contact us for your requests.

DOUBLE SPEED THREE PHASE SMOKE EXTRACTION MOTORS

DAHLANDER F400 SERIES 4-8 POLE ELECTRICAL CHARACTERISTICS @ 50 Hz

	MOTOR TYPE	HOUSING TYPE	RATED VALUES					STARTING VALUES				Breakdown Torque Ratio	EFFICIENCY *			Cosφ	J	Weight (B3)	Sound Pressure Level
			Power		SPEED	CURRENT	TORQUE	CURRENT IA / IN		TORQUE MA / MN			η %						
			kW	HP	rpm	A	Nm	λ	Δ	λ	Δ	Mk/ Mn	4/4	3/4	2/4	4/4	kgm²	kg	dBA**
@4 pole 1500 rpm																			
400 V (YY/Y)	S2HG80M4-8C	Cast Iron	0,15		725	0,90	1,98	-	2,9	-	2,2	3,2	48,9	-	-	0,50	0,00205	17,20	58
	S2HG80M4-8D	Cast Iron	0,20		717	0,85	2,60	-	2,9	-	1,6	2,2	56,7	-	-	0,60	0,00216	19,80	58
	S2HG90S4-8B	Cast Iron	0,30		700	1,20	4,00	-	3,1	-	1,7	2,1	60,9	-	-	0,61	0,00205	27,50	58
	S2HG90L4-8C	Cast Iron	0,40		662	1,30	5,80	-	2,3	-	1,4	1,4	57,2	-	-	0,71	0,00267	30,80	57
	S2HG100L4-8B	Cast Iron	0,55		725	2,30	7,30	-	3,0	-	2,4	3,0	62	-	-	0,51	0,00521	36,50	54
	S2HG100L4-8C	Cast Iron	0,70		720	2,55	9,30	-	3,2	-	1,5	2,0	69,8	-	-	0,57	0,00694	40,00	54
	S2HG112M4-8B	Cast Iron	1,00		730	4,30	13,00	-	3,9	-	2,3	3,4	70,8	-	-	0,49	0,01085	48,30	55
	S2HG132S4-8B	Cast Iron	1,30		734	4,10	16,90	-	4,2	-	1,5	2,6	74,1	-	-	0,58	0,14136	146,60	62
	S2HG132M4-8C	Cast Iron	1,80		737	5,10	23,30	-	5,0	-	1,6	3,2	74	-	-	0,54	0,03560	99,00	58
	S2HG160M4-8B	Cast Iron	3,00		732	9,30	39,10	-	3,3	-	1,7	2,0	80,6	-	-	0,58	0,03517	111,50	52
	S2HG160L4-8A	Cast Iron	3,50		734	10,60	45,50	-	3,6	-	1,8	2,1	80	-	-	0,58	0,09940	120,00	66
	S2HG180M4-8B	Cast Iron	4,30		739	12,80	55,60	-	4,4	-	1,5	2,3	81,9	-	-	0,57	0,18660	166,00	66
	S2HG180L4-8A	Cast Iron	5,00		730	13,50	65,40	-	3,1	-	1,4	1,8	87,5	-	-	0,64	0,18598	172,00	67
	S2HG200L4-8B	Cast Iron	6,50		738	18,20	84,00	-	4,0	-	1,3	2,4	85,3	-	-	0,59	0,18660	250,00	73
	S2HG200L4-8D	Cast Iron	8,00		739	22,90	103,40	-	4,0	-	1,5	2,1	85,3	-	-	0,56	0,36420	250,00	73
	S2HG225S4-8A	Cast Iron	9,20		740	23,50	118,70	-	4,9	-	1,8	2,6	85,3	-	-	0,65	0,36421	299,00	74
	S2HG225M4-8B	Cast Iron	11,00		740	27,50	142,00	-	4,6	-	2,0	2,3	87,8	-	-	0,66	0,36421	313,00	74
	***S2HG250L4-8D	Cast Iron	-	-	-	-	-	-	-	-	-	-	-	-	-	-	-	-	-
@8 pole 750 rpm																			
400 V (YY/Y)	S2HG80M4-8C	Cast Iron	0,60		1463	1,90	3,90	5,90	-	2,9	-	4,1	73,00	-	-	0,62	0,00205	17,20	54
	S2HG80M4-8D	Cast Iron	0,80		1455	1,95	5,20	5,60	-	1,9	-	2,9	76,30	-	-	0,77	0,00216	19,80	54
	S2HG90S4-8B	Cast Iron	1,20		1432	2,70	8,00	5,90	-	2,1	-	2,8	77,20	-	-	0,82	0,00205	27,50	55
	S2HG90L4-8C	Cast Iron	1,60		1378	3,60	11,10	4,20	-	1,6	-	2,0	82,80	-	-	0,88	0,00267	30,80	54
	S2HG100L4-8B	Cast Iron	2,20		1463	5,25	14,40	7,50	-	3,2	-	4,2	84,30	-	-	0,75	0,00521	36,50	46
	S2HG100L4-8C	Cast Iron	2,80		1457	6,16	18,40	6,20	-	2,0	-	2,6	81,90	-	-	0,80	0,00694	40,00	46
	S2HG112M4-8B	Cast Iron	3,80		1470	10,30	24,60	8,10	-	3,2	-	4,7	86,40	-	-	0,66	0,01085	48,30	60
	S2HG132S4-8B	Cast Iron	5,00		1474	10,30	32,40	8,20	-	2,1	-	3,6	87,30	-	-	0,83	0,14136	146,60	59
	S2HG132M4-8C	Cast Iron	7,20		1479	15,30	46,50	9,20	-	2,1	-	4,2	88,70	-	-	0,79	0,03560	99,00	63
	S2HG160M4-8B	Cast Iron	11,00		1477	22,90	71,10	6,40	-	2,3	-	2,9	89,80	-	-	0,80	0,03517	111,50	64
	S2HG160L4-8A	Cast Iron	14,00		1475	28,60	90,70	5,40	-	1,8	-	2,3	90,50	-	-	0,80	0,09940	120,00	63
	S2HG180M4-8B	Cast Iron	17,00		1484	33,90	109,40	7,80	-	1,9	-	3,2	91,00	-	-	0,81	0,18660	166,00	70
	S2HG180L4-8A	Cast Iron	20,00		1473	38,00	129,70	6,70	-	2,0	-	2,7	91,40	-	-	0,86	0,18598	172,00	70
	S2HG200L4-8B	Cast Iron	28,00		1484	52,50	180,50	7,30	-	1,7	-	4,1	92,10	-	-	0,85	0,18660	250,00	70
	S2HG200L4-8D	Cast Iron	30,00		1485	58,60	192,90	9,20	-	3,1	-	4,3	92,00	-	-	0,82	0,36420	250,00	70
	S2HG225S4-8A	Cast Iron	37,00		1482	68,50	238,40	7,10	-	2,2	-	3,2	92,70	-	-	0,87	0,36421	299,00	71
	S2HG225M4-8B	Cast Iron	44,00		1483	80,80	283,30	7,40	-	2,2	-	3,3	90,40	-	-	0,87	0,36421	313,00	71
	***S2HG250L4-8D	Cast Iron	-	-	-	-	-	-	-	-	-	-	-	-	-	-	-	-	-

* According to IEC 60034-2-1
** The sound pressure measurements are taken 1m away from the motor
** Tolerance +3 dBA
*** Please contact us for your requests.

THREE PHASE SMOKE EXTRACTION MOTORS

F400 SERIES DIMENSION B3

Power [kW]	Number of Poles	Motor Type	Housing Type	Main Dimensions			Foot Mounted Motors						Shaft				Bearing		Seal	
				AC	L	O	B	A	H	HD	K	C	D	E	GA	F	Drive Side	Non drive Side	Drive Side	Non drive Side
0.75	2	S3HG80M2C	Cast Iron	175	247	M20x1.5	100	125	80	230	10.00	50	19	40	21.5	6	6204 ZZ C4	6204 ZZ C4	20*30*7	-
1.10	2	S3HG80M2D	Cast Iron	175	282	M20x1.5	100	125	80	230	10.00	50	19	40	21.5	6	6204 ZZ C4	6204 ZZ C4	20*30*7	-
1.50	2	S3HG90L2C	Cast Iron	185	295	M25x1.5	100	140	90	242	10.00	56	24	50	27	8	6305 ZZ C4	6205-ZZ C4	25*40*7	-
2.20	2	S3HG90L2D	Cast Iron	185	325	M25x1.5	125	140	90	242	10.00	56	24	50	27	8	6305 ZZ C4	6205 ZZ C4	25*40*7	-
3.00	2	S3HG100L2D	Cast Iron	202	373	M25x1.5	140	160	100	269	12.00	63	28	60	31	8	6306 ZZ C4	6306 ZZ C4	30*47*7	-
4.00	2	S3HG112M2C	Cast Iron	222	380	M25x1.5	140	190	112	294	12.00	70	28	60	31	8	6306 ZZ C4	6306 ZZ C4	30*47*7	-
5.50	2	S3HG132S2C	Cast Iron	273	479	M32x1.5	140	216	132	354	12.00	89	38	80	41	10	6308 ZZ C4	6306 ZZ C4	40*62*10	-
7.50	2	S3HG132S2D	Cast Iron	273	479	M32x1.5	140	216	132	354	12.00	89	38	80	41	10	6308 ZZ C4	6306 ZZ C4	40*62*10	-
11.00	2	S3HG160M2C	Cast Iron	327	543	M32x1.5	210	254	160	404	14.50	108	42	110	45	12	6309 ZZ C4	6309 ZZ C4	45*72*10	-
15.00	2	S3HG160M2D	Cast Iron	327	543	M32x1.5	210	254	160	404	14.50	108	42	110	45	12	6309 ZZ C4	6309 ZZ C4	45*72*10	-
18.50	2	S3HG160L2C	Cast Iron	327	543	M32x1.5	210	254	160	404	14.50	108	42	110	45	12	6309 ZZ C4	6309 ZZ C4	45*72*10	-
22.00	2	S3HG180M2A	Cast Iron	355	618	M40x1.5	241	279	180	467	14.50	121	48	110	51.5	14	6310 ZZ C4	6310 ZZ C4	50*80*10	-
30.00	2	S3HG200L2C	Cast Iron	355	680	M40x1.5	305	318	200	484	18.50	135	55	110	59	16	6312 ZZ C4	6310 ZZ C4	60*90*10	-
37.00	2	S3HG200L2D	Cast Iron	355	680	M40x1.5	305	318	200	484	18.50	135	55	110	59	16	6312 ZZ C4	6310 ZZ C4	60*90*10	-
45.00	2	S3HG225M2B	Cast Iron	438	710	M40x1.5	286	356	225	550	18.50	151	55	110	59	16	6313 ZZ C4	6313 ZZ C4	65*100*13	-
55.00	2	S3HG250M2B	Cast Iron	438	740	M50x1.5	349	406	250	575	24.00	170	60	140	64	18	6315 ZZ C4	6313 ZZ C4	75*112*12	-
75.00	2	S4HG280M2C	Cast Iron	574	907	M50x1.5	368	457	280	658	24.00	190	65	140	69	18	6314 C4	6314 C4	70*90*10	-
90.00	2	S4HG280M2D	Cast Iron	574	907	M50x1.5	368	457	280	658	24.00	190	65	140	69	18	6314 C4	6314 C4	70*90*10	-
110.00	2	S4HG315S2C	Cast Iron	645	978	M50x1.5	406	508	315	823	28.00	216	65	140	69	18	6316 C4	6316 C4	72*80*11	-
132.00	2	S4HG315M2B	Cast Iron	645	978	M50x1.5	406	508	315	823	28.00	216	65	140	69	18	6316 C4	6316 C4	72*80*11	-
160.00	2	S4HG315L2A	Cast Iron	645	978	M50x1.5	406	508	315	823	28.00	216	65	140	69	18	6316 C4	6316 C4	72*80*11	-
200.00	2	S4HG315L2C	Cast Iron	645	978	M50x1.5	406	508	315	823	28.00	216	65	140	69	18	6316 C4	6316 C4	72*80*11	-
0.55	4	S3HG80M4C	Cast Iron	175	247	M20x1.5	100	125	80	230	10.00	50	19	40	21.5	6	6204 ZZ C4	6204 ZZ C4	20*30*7	-
0.75	4	S3HG80M4D	Cast Iron	175	282	M20x1.5	100	125	80	230	10.00	50	19	40	21.5	6	6204 ZZ C4	6204 ZZ C4	20*30*7	-
1.10	4	S3HG90L4C	Cast Iron	185	325	M25x1.5	125	140	90	242	10.00	56	24	50	27	8	6305 ZZ C4	6205 ZZ C4	25*40*7	-
1.50	4	S3HG90L4D	Cast Iron	185	325	M25x1.5	125	140	90	242	10.00	56	24	50	27	8	6305 ZZ C4	6205 ZZ C4	25*40*7	-
2.20	4	S3HG100L4C	Cast Iron	202	373	M25x1.5	140	160	100	269	12.00	63	28	60	31	8	6306 ZZ C4	6306 ZZ C4	30*47*7	-
3.00	4	S3HG100L4D	Cast Iron	202	403	M25x1.5	140	160	100	269	12.00	63	28	60	31	8	6306 ZZ C4	6306 ZZ C4	30*47*7	-
4.00	4	S3HG112M4D	Cast Iron	222	415	M25x1.5	140	190	112	294	12.00	70	28	60	31	8	6306 ZZ C4	6306 ZZ C4	30*47*7	-
5.50	4	S3HG132S4B	Cast Iron	273	479	M32x1.5	140	216	132	354	12.00	89	38	80	41	10	6308 ZZ C4	6306 ZZ C4	40*62*10	-
7.50	4	S3HG132M4D	Cast Iron	273	479	M32x1.5	140	216	132	354	12.00	89	38	80	41	10	6308 ZZ C4	6306 ZZ C4	40*62*10	-
11.00	4	S3HG160M4C	Cast Iron	327	543	M32x1.5	210	254	160	404	14.50	108	42	110	45	12	6309 ZZ C4	6309 ZZ C4	45*72*10	-
15.00	4	S3HG160L4B	Cast Iron	327	543	M32x1.5	210	254	160	404	14.50	108	42	110	45	12	6309 ZZ C4	6309 ZZ C4	45*72*10	-
18.50	4	S3HG180M4B	Cast Iron	355	618	M40x1.5	241	279	180	467	14.50	121	48	110	51.5	14	6310 ZZ C4	6310 ZZ C4	50*80*10	-
22.00	4	S3HG180L4B	Cast Iron	355	678	M40x1.5	241	279	180	467	14.50	121	48	110	51.5	14	6310 ZZ C4	6310 ZZ C4	50*80*10	-
30.00	4	S3HG200L4D	Cast Iron	355	680	M40x1.5	305	318	200	484	18.50	135	55	110	59	16	6312 ZZ C4	6310 ZZ C4	60*90*10	-
37.00	4	S3HG225S4B	Cast Iron	438	740	M40x1.5	286	356	225	550	18.50	151	60	140	64	18	6313 ZZ C4	6313 ZZ C4	65*100*13	-
45.00	4	S3HG225M4C	Cast Iron	438	805	M40x1.5	286	356	225	550	18.50	151	60	140	64	18	6313 ZZ C4	6313 ZZ C4	65*100*13	-
55.00	4	***S3HG250M4B	Cast Iron																	
75.00	4	S4HG280M4C	Cast Iron	574	913	M50x1.5	419	457	280	658	24.00	190	75	140	79.5	20	6317 C4	6317 C4	85*117*12	-
90.00	4	S4HG280M4D	Cast Iron	574	913	M50x1.5	419	457	280	658	24.00	190	75	140	79.5	20	6317 C4	6317 C4	85*117*12	-

*** Please contact us for your requests.

THREE PHASE SMOKE EXTRACTION MOTORS

F400 SERIES DIMENSION B3

Power [kW]	Number of Poles	Motor Type	Housing Type	Main Dimensions			Foot Mounted Motors						Shaft				Bearing		Seal	
				AC	L	O	B	A	H	HD	K	C	D	E	GA	F	Drive Side	Non drive Side	Drive Side	Non drive Side
110,00	4	S4HG315S4C	Cast Iron	645	1008	M50x1.5	406	508	315	823	28,00	216	80	170	85	22	6319 C4	6319 C4	85*95*11	-
132,00	4	S4HG315M4B	Cast Iron	645	1008	M50x1.5	406	508	315	823	28,00	216	80	170	85	22	6319 C4	6319 C4	85*95*11	-
160,00	4	S4HG315L4A	Cast Iron	645	1088	M50x1.5	457	508	315	823	28,00	216	80	170	85	22	6319 C4	6319 C4	85*95*11	-
200,00	4	S4HG315L4C	Cast Iron	645	1088	M50x1.5	457	508	315	823	28,00	216	80	170	85	22	6319 C4	6319 C4	85*95*11	-
0,20/0,80	2-4	S2HG80M2-4A	Cast Iron	175	247	M20x1.5	100	125	80	230	10,00	50	19	40	21,5	6	6204 ZZ C4	6204 ZZ C4	20*30*7	-
0,25/1,10	2-4	S2HG80M2-4B	Cast Iron	175	282	M20x1.5	100	125	80	230	10,00	50	19	40	21,5	6	6204 ZZ C4	6204 ZZ C4	20*30*7	-
0,37/1,50	2-4	S2HG90S2-4B	Cast Iron	185	295	M25x1.5	100	140	90	242	10,00	56	24	50	27	8	6305 ZZ C4	6205 ZZ C4	25*40*7	-
0,50/2,20	2-4	S2HG90L2-4C	Cast Iron	185	325	M25x1.5	125	140	90	242	10,00	56	24	50	27	8	6305 ZZ C4	6205 ZZ C4	25*40*7	-
0,65/2,50	2-4	S2HG100L2-4B	Cast Iron	202	403	M25x1.5	140	160	100	269	12,00	63	28	60	31	8	6306 ZZ C4	6306 ZZ C4	30*47*7	-
0,80/3,10	2-4	S2HG100L2-4D	Cast Iron	202	373	M25x1.5	140	160	100	269	12,00	63	28	60	31	8	6306 ZZ C4	6306 ZZ C4	30*47*7	-
1,10/4,40	2-4	S2HG112M2-4D	Cast Iron	222	415	M25x1.5	140	190	112	294	12,00	70	28	60	31	8	6306 ZZ C4	6306 ZZ C4	30*47*7	-
1,50/6,00	2-4	S2HG132S2-4B	Cast Iron	273	479	M32x1.5	140	216	132	354	12,00	89	38	80	41	10	6308 ZZ C4	6306 ZZ C4	40*62*10	-
2,00/8,00	2-4	S2HG132M2-4D	Cast Iron	273	479	M32x1.5	140	216	132	354	12,00	89	38	80	41	10	6308 ZZ C4	6306 ZZ C4	40*62*10	-
3,00/12,00	2-4	S2HG160M2-4B	Cast Iron	327	543	M32x1.5	210	254	160	404	14,50	108	42	110	45	12	6309 ZZ C4	6309 ZZ C4	45*72*10	-
4,00/16,00	2-4	S2HG160L2-4B	Cast Iron	327	585	M32x1.5	210	254	160	404	14,50	108	42	110	45	12	6309 ZZ C4	6309 ZZ C4	45*72*10	-
5,50/20,00	2-4	S2HG180L2-4C	Cast Iron	355	748	M40x1.5	241	279	180	467	14,50	121	48	110	51,5	14	6310 ZZ C4	6310 ZZ C4	50*80*10	-
6,30/25,00	2-4	S2HG180L2-4B	Cast Iron	355	678	M40x1.5	241	279	180	467	14,50	121	48	110	51,5	14	6310 ZZ C4	6310 ZZ C4	50*80*10	-
8,50/33,00	2-4	S2HG200L2-4B	Cast Iron	355	750	M40x1.5	305	318	200	484	18,50	135	55	110	59	16	6312 ZZ C4	6310 ZZ C4	60*90*10	-
9,00/37,00	2-4	S2HG225M2-4C	Cast Iron	438	805	M40x1.5	286	356	225	550	18,50	151	60	140	64	18	6313 ZZ C4	6313 ZZ C4	65*100*13	-
12,00/46,00	2-4	S2HG225M2-4D	Cast Iron	438	805	M40x1.5	286	356	225	550	18,50	151	60	140	64	18	6313 ZZ C4	6313 ZZ C4	65*100*13	-
15,00/55,00	2-4	***S2HG250M2-4C	Cast Iron																	
0,15/0,60	4-8	S2HG80M4-8C	Cast Iron	175	247	M20x1.5	100	125	80	230	10,00	50	19	40	21,5	6	6204 ZZ C4	6204 ZZ C4	20*30*7	-
0,20/0,80	4-8	S2HG80M4-8D	Cast Iron	175	282	M20x1.5	100	125	80	230	10,00	50	19	40	21,5	6	6204 ZZ C4	6204 ZZ C4	20*30*7	-
0,30/1,20	4-8	S2HG90S4-8B	Cast Iron	185	325	M25x1.5	125	140	90	242	10,00	56	24	50	27	8	6305 ZZ C4	6205 ZZ C4	25*40*7	-
0,40/1,60	4-8	S2HG90L4-8C	Cast Iron	185	325	M25x1.5	125	140	90	242	10,00	56	24	50	27	8	6305 ZZ C4	6205 ZZ C4	25*40*7	-
0,55/2,20	4-8	S2HG100L4-8B	Cast Iron	202	373	M25x1.5	140	160	100	269	12,00	63	28	60	31	8	6306 ZZ C4	6306 ZZ C4	30*47*7	-
0,70/2,80	4-8	S2HG100L4-8C	Cast Iron	202	403	M25x1.5	140	160	100	269	12,00	63	28	60	31	8	6306 ZZ C4	6306 ZZ C4	30*47*7	-
1,00/3,80	4-8	S2HG112M4-8B	Cast Iron	222	380	M25x1.5	140	190	112	294	12,00	70	28	60	31	8	6306 ZZ C4	6306 ZZ C4	30*47*7	-
1,30/5,00	4-8	S2HG132S4-8B	Cast Iron	273	479	M32x1.5	140	216	132	354	12,00	89	38	80	41	10	6308 ZZ C4	6306 ZZ C4	40*62*10	-
1,80/7,20	4-8	S2HG132M4-8C	Cast Iron	273	479	M32x1.5	140	216	132	354	12,00	89	38	80	41	10	6308 ZZ C4	6306 ZZ C4	40*62*10	-
3,00/11,00	4-8	S2HG160M4-8B	Cast Iron	327	585	M32x1.5	210	254	160	404	14,50	108	42	110	45	12	6309 ZZ C4	6309 ZZ C4	45*72*10	-
3,50/14,00	4-8	S2HG160L4-8A	Cast Iron	327	585	M32x1.5	210	254	160	404	14,50	108	42	110	45	12	6309 ZZ C4	6309 ZZ C4	45*72*10	-
4,30/17,00	4-8	S2HG180M4-8B	Cast Iron	355	618	M40x1.5	241	279	180	467	14,50	121	48	110	51,5	14	6310 ZZ C4	6310 ZZ C4	50*80*10	-
5,00/20,00	4-8	S2HG180L4-8A	Cast Iron	355	618	M40x1.5	241	279	180	467	14,50	121	48	110	51,5	14	6310 ZZ C4	6310 ZZ C4	50*80*10	-
6,50/28,00	4-8	S2HG200L4-8B	Cast Iron	355	750	M40x1.5	305	318	200	484	18,50	135	55	110	59	16	6312 ZZ C4	6310 ZZ C4	60*90*10	-
8,00/30,00	4-8	S2HG200L4-8D	Cast Iron	355	750	M40x1.5	305	318	200	484	18,50	135	55	110	59	16	6312 ZZ C4	6310 ZZ C4	60*90*10	-
9,20/37,00	4-8	S2HG225S4-8A	Cast Iron	438	740	M40x1.5	286	356	225	550	18,50	151	60	140	64	18	6313 ZZ C4	6313 ZZ C4	65*100*13	-
11,00/44,00	4-8	S2HG225M4-8B	Cast Iron	438	740	M40x1.5	286	356	225	550	18,50	151	60	140	64	18	6313 ZZ C4	6313 ZZ C4	65*100*13	-
14,70/55,00	4-8	***S2HG250L4-8D	Cast Iron																	

*** Please contact us for your requests.

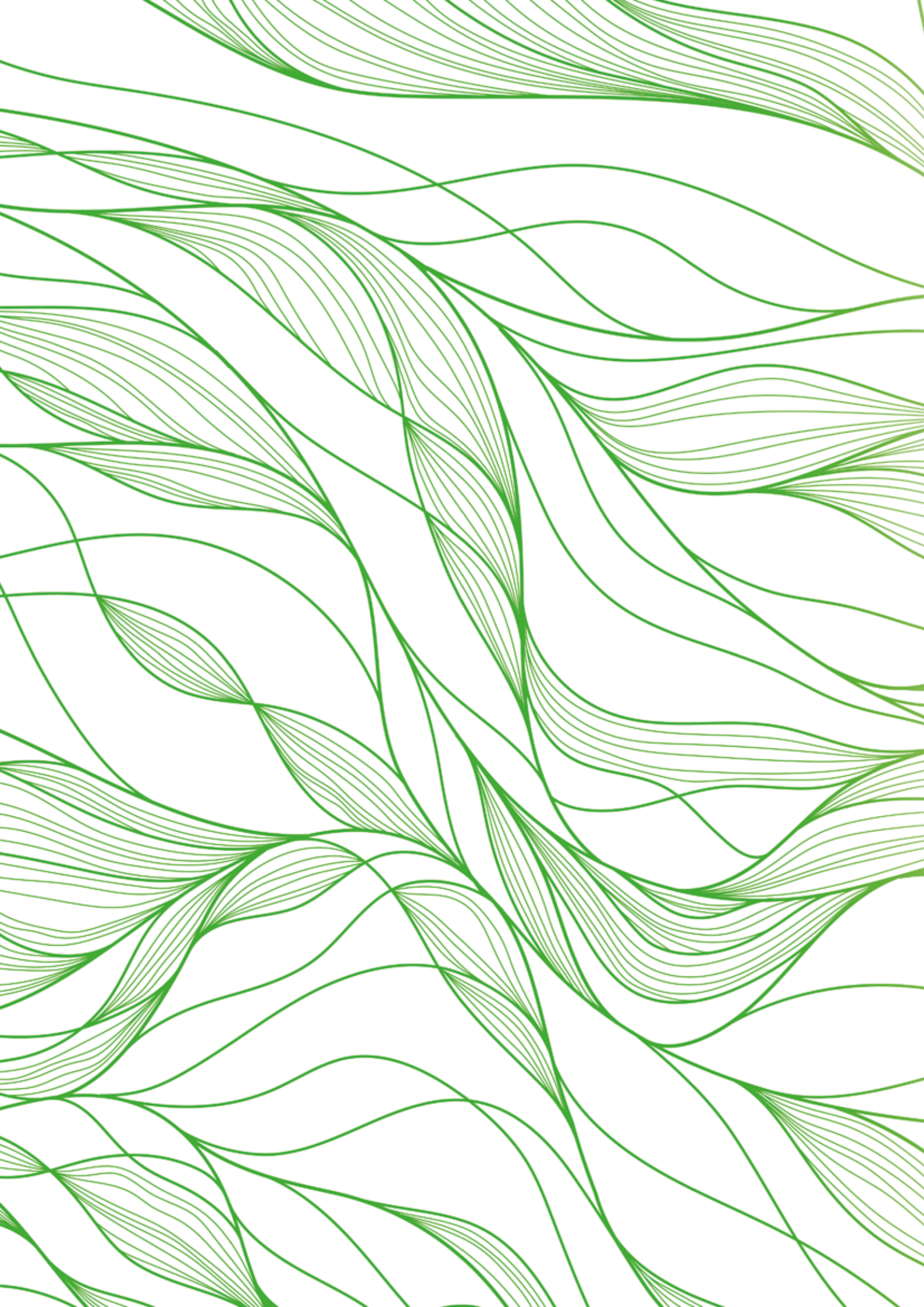

BRAKE MOTORS

BRAKE MOTORS

TECHNICAL DOCUMENTATION

Mechanical and electrical properties are same as standard type motors. Non-drive endshields are made of cast-iron

Brake Specifications

DC electromagnetic brakes with a safety-design are used in brake motors. Different brake voltages are available upon request.

Working Principle

When the supply fails, the springs make the armature plate press the brake disk and then motor automatically starts braking. When the brake being supplied, electromagnet pulls the armature plate then both the brake disk and motor shaft are set to free.

Brake Disk

Asbestos-free brake material is used with long-life friction rings.

Brake Torque

Braking torque can be adjusted by ring. In the table shown below, you will find the distance "A" in order to obtain the braking torque requested.

The change in the wear of the friction material due to the change in braking torque is given below.

Type	Distance between Adjusting-ring and Electromagnet: "A" (in mm)				
	4	3	2	1	"A"
H80	16	18	22	24	26
H90	16	18	22	24	26
H100	26	34	38	42	48
H112	45	50	58	67	80
H132	90	95	100	110	120
Breaking Torque Value (kgm)					Max. torque (kgm)

Braking Torque

Braking torque can be adjusted by ring. In the table shown below, you will find the distance "A" in order to obtain the braking torque requested. The variation in the wear of friction material which is subject to change in braking torque is given below.

Switching Times

Normal switching times are given in the table below. These values are subject to change according to load characteristics.

Type	Normal switch-off time ms	Normal switch-on time ms	Fast switch-off time ms
Q3H80	15	55	30
Q3H90	15	65	40
Q3H100	20	75	45
Q3H112	25	180	85

Special Constructions

The following special construction class features are possible upon request;

- Special shaft end
- Special flanges
- Different type bearings
- Fixed bearings
- IP55 protection class
- Different voltages an frequencies
- AC type brake

Air Gap

Ideal air-gap values are given in the table below.
The maximum acceptable air-gap value is 0,7 mm.
If this value is exceeded, the brake's performance will change and air gap must be adjusted again.

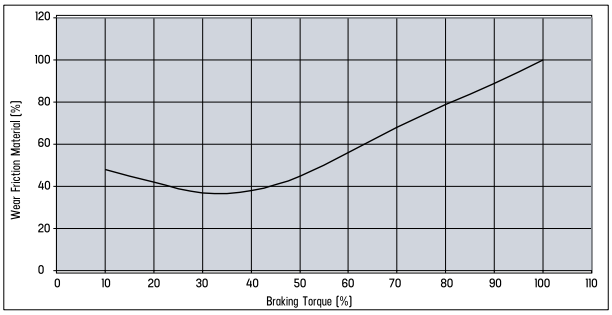

Type	Q3H80	Q3H90	Q3H100	Q3H112	Q3H132
Ideal Air-gap (mm)	0,2	0,2	0,3	0,3	0,3

Rectifier Bridge

Normal Type (AS) half-wave rectifier is used as standard in motors. By using fast type (ASR) rectifier, it is possible to get fast switch on times which is shown on the table.

ELECTRICAL CHARACTERISTICS @ 50 Hz

	MOTOR TYPE	HOUSING TYPE	RATED VALUES					STARTING VALUES				Breakdown Torque Ratio	EFFICIENCY *	Cosφ	Brake Torque (Nm)	J	Weight (B3)	Sound Pressure Level
			Power		SPEED	CURRENT	TORQUE	CURRENT IA / IN		TORQUE MA / MN			η %					
			kW	HP	rpm	A	Nm	⅄	Δ	⅄	Δ	Mk/ Mn	4/4	4/4	kgm²	kgm²	kg	dBA**
2 pole 3000 rpm																		
230/400 V	Q3H80M2A70	Aluminium	0.75	1.0	2890	1.6	2.5	8.3	–	3.7	–	4.2	80.7	0.85	20-30	0.0014	13	57
230/400 V	Q3H80M2B70	Aluminium	1.1	1.5	2890	2.3	3.6	9.1	–	3.9	–	4.3	82.7	0.85	20-30	0.0017	13	57
230/400 V	Q3H90S2A70	Aluminium	1.5	2.0	2930	3.0	4.9	11.3	–	3.8	–	5.0	84.2	0.85	20-30	0.0023	17	62
230/400 V	Q3H90L2A70	Aluminium	2.2	3.0	2917	4.3	7.2	9.2	–	3.1	–	4.9	85.9	0.87	20-30	0.0028	19	62
230/400 V	Q3H100L2A70	Aluminium	3.0	4.0	2925	5.5	9.8	11.0	–	3.9	–	4.7	87.1	0.90	33-48	0.0052	19	66
400/690 V	Q3H112M2A70	Aluminium	4.0	5.5	2918	7.3	13.1	3.7	11.1	1.1	3.4	4.5	88.1	0.89	33-48	0.0056	32	68
400/690 V	Q3H132M2D70	Aluminium	5.5	7.5	2920	10.2/5.9	17.9	-	8.9	-	3.1	43	89.2	0.88	80-120	-	52	73
4 pole 1500 rpm																		
230/400 V	Q3H80M4A70	Aluminium	0.55	3/4	1435	1.3	3.6	6.4	–	2.3	–	3.2	77.1	0.76	20-30	0.00175	10	49
230/400 V	Q3H80M4B70	Aluminium	0.75	1	1445	1.7	5.0	6.7	–	2.8	–	3.4	82.5	0.77	20-30	0.00261	13	52
230/400 V	Q3H90S4A70	Aluminium	1.1	1.5	1445	2.5	7.3	7.2	–	3.2	–	4.0	84.1	0.78	20-30	0.0043	19	54
230/400 V	Q3H90L4A70	Aluminium	1.5	2	1449	3.5	9.9	8.1	–	3.6	–	4.2	85.3	0.76	20-30	0.00526	20	54
230/400 V	Q3H100L4A70	Aluminium	2.2	3	1445	4.5	14.4	8.9	–	3.5	–	4.3	86.7	0.83	33-48	0.00810	26	55
230/400 V	Q3H100L4B70	Aluminium	3.0	4.0	1446	6.2	19.9	8.4	–	3.3	–	3.8	87.7	0.81	33-48	0.01059	31	56
400/690 V	Q3H112M4B70	Aluminium	4.0	5.5	1452	8.2	26.5	9.1	3.0	1.1	3.3	4.1	88.6	0.80	67-85	0.01383	31	56
400/690 V	Q3H132M4D70	Aluminium	7.5	10	1467	15.2	48.8	2.7	8.2	0.8	2.3	3.8	89.6	0.81	+	0.04030	60	60
6 pole 1000 rpm																		
230/400 V	Q3H80M6A70	Aluminium	0.37	1/2	953	1.2	3.7	4.4	–	2.1	–	2.8	67.6	0.65	20-30	0.00261	10	52
230/400 V	Q3H80M6B70	Aluminium	0.55	3/4	942	1.6	5.6	4.1	–	1.8	–	2.3	73.1	0.70	20-30	0.00328	12	52
230/400 V	Q3H90S6A70	Aluminium	0.75	1.0	950	2.1	7.6	4.9	–	2.5	–	3.0	78.9	0.67	20-30	0.00460	18	53
230/400 V	Q3H90L6B70	Aluminium	1.10	1.5	950	3.0	11.1	4.5	–	2.6	–	2.9	81.0	0.67	20-30	0.00528	20	53
230/400 V	Q3H100L6A70	Aluminium	1.50	2.0	960	4.1	14.9	4.8	–	2.6	–	3.0	82.5	0.65	33-48	0.01059	26	55
230/400 V	Q3H112M6A70	Aluminium	2.20	3.0	957	5.2	22.0	4.9	–	2.7	–	3.0	84.3	0.71	67-85	0.01383	32	57
400/690 V	Q3H132M6B70	Aluminium	5.0	7.5	971	12.6/7.3	54.1	–	5.7	–	1.5	2.6	87.2	0.75	+	0.0594	66	73

* According to IEC 60034-2-1
** The sound pressure measurements are taken 1m away from the motor
** Tolerance +3 dBA
*** Please contact us for your requests.

BRAKE MOTORS

DIMENSION - B3

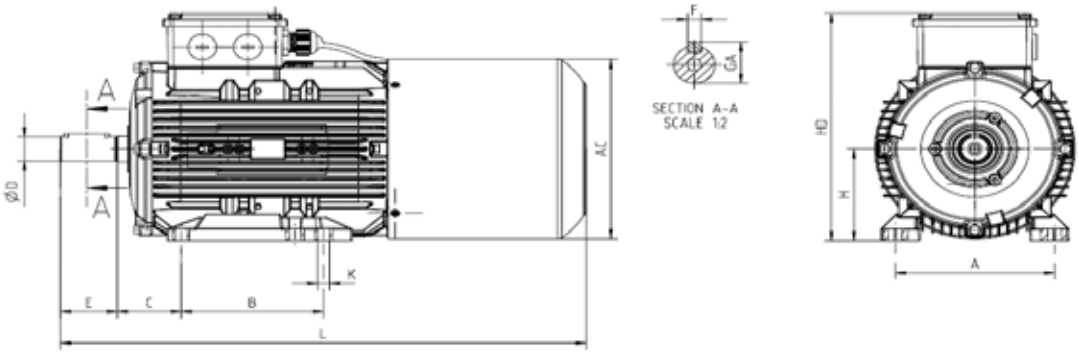

Power [kW]	Number of Poles	Motor Type	Braking Torque [Nm]	Housing Type	Main Dimensions			Foot Mounted Motors						Shaft				Bearing		Seal	
					AC	L	O	B	A	H	HD	K	C	D	E	GA	F	Drive Side	Non drive Side	Drive Side	Non drive Side
0.37	6	Q3H80M6A70	20-30	Aluminium	158	340	1xM20	100	125	80	216	10	50	19	40	21.5	6	6204-ZZ	6204-ZZ	20*30*7	20*30*7
0.55	4	Q3H80M4A70	20-30	Aluminium	158	340	1xM20	100	125	80	216	10	50	19	40	21.5	6	6204-ZZ	6204-ZZ	20*30*7	20*30*7
0.55	6	Q3H80M6B70	20-30	Aluminium	158	365	1xM20	100	125	80	216	10	50	19	40	21.5	6	6204-ZZ	6204-ZZ	20*30*7	20*30*7
0.75	2	Q3H80M2A70	20-30	Aluminium	158	340	1xM20	100	125	80	216	10	50	19	40	21.5	6	6204-ZZ	6204-ZZ	20*30*7	20*30*7
0.75	4	Q3H80M4B70	20-30	Aluminium	158	340	1xM20	100	125	80	216	10	50	19	40	21.5	6	6204-ZZ	6204-ZZ	20*30*7	20*30*7
0.75	6	Q3H90S6A70	20-30	Aluminium	176	420	1xM25	100-125	140	90	223	10	56	24	50	27	8	6305-ZZ	6205-ZZ	25*40*7	25*40*7
1.1	2	Q3H80M2B70	20-30	Aluminium	158	340	1xM20	100	125	80	216	10	50	19	40	21.5	6	6204-ZZ	6204-ZZ	20*30*7	20*30*7
1.1	4	Q3H90S4A70	20-30	Aluminium	176	460	1xM25	100-125	140	90	223	10	56	24	50	27	8	6305-ZZ	6205-ZZ	25*40*7	25*40*7
1.1	6	Q3H90L6B70	20-30	Aluminium	176	420	1xM25	100-125	140	90	223	10	56	24	50	27	8	6305-ZZ	6205-ZZ	25*40*7	25*40*7
1.5	2	Q3H90S2A70	20-30	Aluminium	176	420	1xM25	100-125	140	90	223	10	56	24	50	27	8	6305-ZZ	6205-ZZ	25*40*7	25*40*7
1.5	4	Q3H90L4A70	20-30	Aluminium	176	460	1xM25	100-125	140	90	223	10	56	24	50	27	8	6305-ZZ	6205-ZZ	25*40*7	25*40*7
1.5	6	Q3H100L6A70	33-48	Aluminium	196	482	1xM25	140	160	100	243	12	63	28	60	31	8	6306-ZZ	6205-ZZ	30*47*7	25*40*7
2.2	2	Q3H90L2A70	20-30	Aluminium	176	420	1xM25	100-125	140	90	223	10	56	24	50	27	8	6305-ZZ	6205-ZZ	25*40*7	25*40*7
2.2	4	Q3H100L4A70	33-48	Aluminium	196	482	1xM25	140	160	100	243	12	63	28	60	31	8	6306-ZZ	6205-ZZ	30*47*7	25*40*7
2.2	6	Q3H112M6A70	67-85	Aluminium	219	497	1xM25	140	190	112	265	12	70	28	60	31	8	6306-ZZ	6206-ZZ	30*47*7	30*47*7
3	2	Q3H100L2A70	33-48	Aluminium	196	482	1xM25	140	160	100	243	12	63	28	60	31	8	6306-ZZ	6205-ZZ	30*47*7	25*40*7
3	4	Q3H100L4B70	33-48	Aluminium	196	482	1xM25	140	160	100	243	12	63	28	60	31	8	6306-ZZ	6205-ZZ	30*47*7	25*40*7
4	2	Q3H112M2A70	67-85	Aluminium	219	497	1xM25	140	190	112	265	12	70	28	60	31	8	6306-ZZ	6206-ZZ	30*47*7	30*47*7
4	4	Q3H112M4B70	67-85	Aluminium	219	497	1xM25	140	190	112	265	12	70	28	60	31	8	6306-ZZ	6206-ZZ	30*47*7	30*47*7
7.5	4	Q3H132M4D70	95-120	Aluminium	260	516	1xM32	140-178	216	132	312	12	89	38	80	41	10	6208 ZZ	6208-ZZ	40*62*10	40*62*10

Dimensions are in mm.
[1] Tolerance DIN EN 50347 "j6" up to f28mm.."k6" above f28mm.
[2] According to DIN 6885
[3] Tolerance DIN EN 50347 "j6"
[4] Lifting bolt is mounted from frame size 112 on

DIMENSION B5 - B35

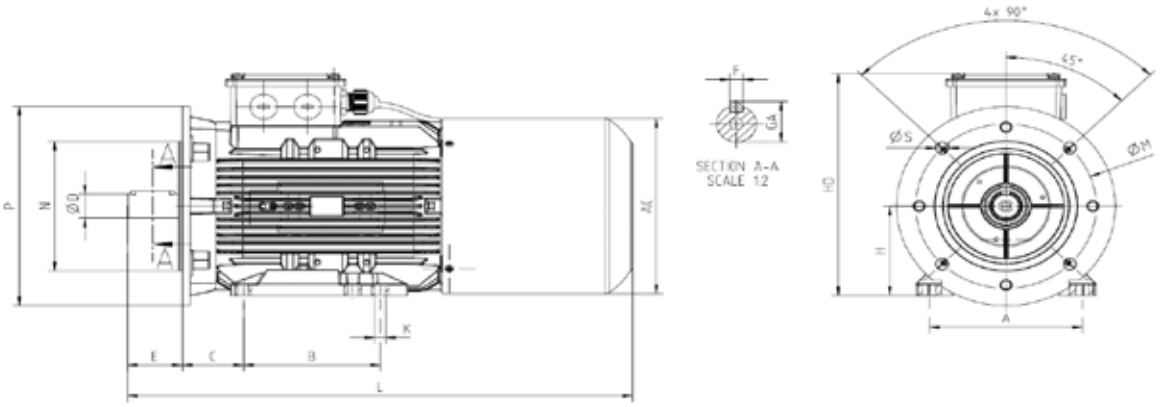

Power [kW]	Number of Poles	Motor Type	Braking Torque [Nm]	Housing Type	Main Dimensions			Foot Mounted Motors						Shaft				Bearing		Seal		Flange [FA B5]				
					AC	L	O	B	A	H	HD	K	C	D[1]	E	GA	F[2]	Drive Side	Non drive Side	Drive Side	Non drive Side	P	N[3]	M	R	S
0.37	6	Q3H80M6A70	20-30	Aluminium	158	340	1xM20	100	125	80	216	10	50	19	40	21,5	6	6204-ZZ	6204-ZZ	20*30*7	20*30*7	200	130	165	-	12
0.55	4	Q3H80M4A70	20-30	Aluminium	158	340	1xM20	100	125	80	216	10	50	19	40	21,5	6	6204-ZZ	6204-ZZ	20*30*7	20*30*7	200	130	165	-	12
0.55	6	Q3H80M6B70	20-30	Aluminium	158	365	1xM20	100	125	80	216	10	50	19	40	21,5	6	6204-ZZ	6204-ZZ	20*30*7	20*30*7	200	130	165	-	13
0.75	2	Q3H80M2A70	20-30	Aluminium	158	340	1xM20	100	125	80	216	10	50	19	40	21,5	6	6204-ZZ	6204-ZZ	20*30*7	20*30*7	200	130	165	-	12
0.75	4	Q3H80M4B70	20-30	Aluminium	158	340	1xM20	100	125	80	216	10	50	19	40	21,5	6	6204-ZZ	6204-ZZ	20*30*7	20*30*7	200	130	165	-	13
0.75	6	Q3H90S6A70	20-30	Aluminium	176	420	1xM25	100-125	140	90	223	10	56	24	50	27	8	6305-ZZ	6205-ZZ	25*40*7	25*40*7	200	130	165	-	14
1.1	2	Q3H80M2B70	20-30	Aluminium	158	340	1xM20	100	125	80	216	10	50	19	40	21,5	6	6204-ZZ	6204-ZZ	20*30*7	20*30*7	200	130	165	-	12
1.1	4	Q3H90S4A70	20-30	Aluminium	176	460	1xM25	100-125	140	90	223	10	56	24	50	27	8	6305-ZZ	6205-ZZ	25*40*7	25*40*7	200	130	165	-	14
1.1	6	Q3H90L6B70	20-30	Aluminium	176	420	1xM25	100-125	140	90	223	10	56	24	50	27	8	6305-ZZ	6205-ZZ	25*40*7	25*40*7	200	130	165	-	15
1.5	2	Q3H90S2A70	20-30	Aluminium	176	420	1xM25	100-125	140	90	223	10	56	24	50	27	8	6305-ZZ	6205-ZZ	25*40*7	25*40*7	200	130	165	-	12
1.5	4	Q3H90L4A70	20-30	Aluminium	176	460	1xM25	100-125	140	90	223	10	56	24	50	27	8	6305-ZZ	6205-ZZ	25*40*7	25*40*7	200	130	165	-	15
1.5	6	Q3H100L6A70	33-48	Aluminium	196	482	1xM25	140	160	100	243	12	63	28	60	31	8	6306-ZZ	6205-ZZ	30*47*7	25*40*7	250	180	215	-	14.5
2.2	2	Q3H90L2A70	20-30	Aluminium	176	420	1xM25	100-125	140	90	223	10	56	24	50	27	8	6305-ZZ	6205-ZZ	25*40*7	25*40*7	200	130	165	-	12
2.2	4	Q3H100L4A70	33-48	Aluminium	196	482	1xM25	140	160	100	243	12	63	28	60	31	8	6306-ZZ	6205-ZZ	30*47*7	25*40*7	250	180	215	-	14.5
2.2	6	Q3H112M6A70	67-85	Aluminium	219	497	1xM25	140	190	112	265	12	70	28	60	31	8	6306-ZZ	6206-ZZ	30*47*7	30*47*7	250	180	215	-	15.5
3	2	Q3H100L2A70	33-48	Aluminium	196	482	1xM25	140	160	100	243	12	63	28	60	31	8	6306-ZZ	6205-ZZ	30*47*7	25*40*7	250	180	215	-	14.5
3	4	Q3H100L4B70	33-48	Aluminium	196	482	1xM25	140	160	100	243	12	63	28	60	31	8	6306-ZZ	6205-ZZ	30*47*7	25*40*7	250	180	215	-	15.5
4	2	Q3H112M2A70	67-85	Aluminium	219	497	1xM25	140	190	112	265	12	70	28	60	31	8	6306-ZZ	6206-ZZ	30*47*7	30*47*7	250	180	215	-	15.5
4	4	Q3H112M4B70	67-85	Aluminium	219	497	1xM25	140	190	112	265	12	70	28	60	31	8	6306-ZZ	6206-ZZ	30*47*7	30*47*7	250	180	215	-	16.5
7.5	4	Q3H132M4D70	95-120	Aluminium	260	516	1xM32	140-178	216	132	312	12	89	38	80	41	10	6208 ZZ	6208-ZZ	40*62*10	40*62*10	300	230	265	-	14.5

Dimensions are in mm.
[1] Tolerance DIN EN 50347 "j6" up to f28mm.."k6" above f28mm.
[2] According to DIN 6885
[3] Tolerance DIN EN 50347 "j6"
[4] Lifting bolt is mounted from frame size 112 on

BRAKE MOTORS

DIMENSION B14a - 34a

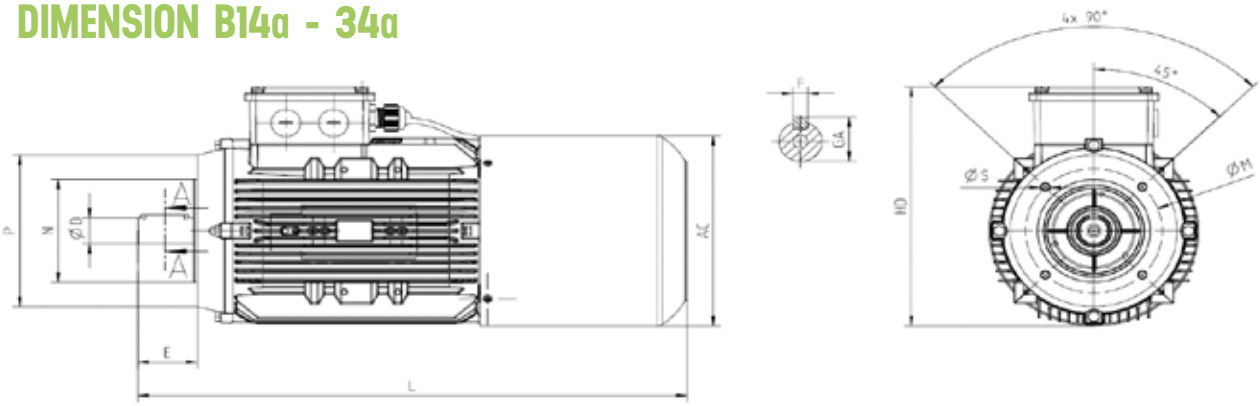

Power (kW)	Number of Poles	Motor Type	Housing Type	Main Dimensions			Foot Mounted Motors						Shaft				Bearing		Seal		Flange (FC B14a, B34a)				
				AC	L	O	B	A	H	HD	K	C	D[1]	E	GA	F[2]	Drive Side	Non drive Side	Drive Side	Non drive Side	P	N[3]	M	R	S
0.37	6	Q3H80M6A70	Aluminium	158	340	1xM20	100	125	80	216	10	50	19	40	21.5	6	6204-ZZ	6204-ZZ	20*30*7	20*30*7	120	80	100	-	M6
0.55	4	Q3H80M4A70	Aluminium	158	340	1xM20	100	125	80	216	10	50	19	40	21.5	6	6204-ZZ	6204-ZZ	20*30*7	20*30*7	120	80	100	-	M6
0.55	6	Q3H80M6B70	Aluminium	158	365	1xM20	100	125	80	216	10	50	19	40	21.5	6	6204-ZZ	6204-ZZ	20*30*7	20*30*7	120	80	100	-	M6
0.75	2	Q3H80M2A70	Aluminium	158	340	1xM20	100	125	80	216	10	50	19	40	21.5	6	6204-ZZ	6204-ZZ	20*30*7	20*30*7	120	80	100	-	M6
0.75	4	Q3H80M4B70	Aluminium	158	340	1xM20	100	125	80	216	10	50	19	40	21.5	6	6204-ZZ	6204-ZZ	20*30*7	20*30*7	120	80	100	-	M6
0.75	6	Q3H90S6A70	Aluminium	176	420	1xM25	100-125	140	90	223	10	56	24	50	27	8	6305-ZZ	6205-ZZ	25*40*7	25*40*7	140	95	115	-	M8
1.1	2	Q3H80M2B70	Aluminium	158	340	1xM20	100	125	80	216	10	50	19	40	21.5	6	6204-ZZ	6204-ZZ	20*30*7	20*30*7	120	80	100	-	M6
1.1	4	Q3H90S4A70	Aluminium	176	460	1xM25	100-125	140	90	223	10	56	24	50	27	8	6305-ZZ	6205-ZZ	25*40*7	25*40*7	140	95	115	-	M8
1.1	6	Q3H90L6B70	Aluminium	176	420	1xM25	100-125	140	90	223	10	56	24	50	27	8	6305-ZZ	6205-ZZ	25*40*7	25*40*7	140	95	115	-	M8
1.5	2	Q3H90S2A70	Aluminium	176	420	1xM25	100-125	140	90	223	10	56	24	50	27	8	6305-ZZ	6205-ZZ	25*40*7	25*40*7	140	95	115	-	M8
1.5	4	Q3H90L4A70	Aluminium	176	460	1xM25	100-125	140	90	223	10	56	24	50	27	8	6305-ZZ	6205-ZZ	25*40*7	25*40*7	140	95	115	-	M8
1.5	6	Q3H100L6A70	Aluminium	196	482	1xM25	140	160	100	243	12	63	28	60	31	8	6306-ZZ	6205-ZZ	30*47*7	25*40*7	160	110	130	-	M8
2.2	2	Q3H90L2A70	Aluminium	176	420	1xM25	100-125	140	90	223	10	56	24	50	27	8	6305-ZZ	6205-ZZ	25*40*7	25*40*7	140	95	115	-	M8
2.2	4	Q3H100L4A70	Aluminium	196	482	1xM25	140	160	100	243	12	63	28	60	31	8	6306-ZZ	6205-ZZ	30*47*7	25*40*7	160	110	130	-	M8
2.2	6	Q3H112M6A70	Aluminium	219	497	1xM25	140	190	112	265	12	70	28	60	31	8	6306-ZZ	6206-ZZ	30*47*7	30*47*7	160	110	130	-	M8
3	2	Q3H100L2A70	Aluminium	196	482	1xM25	140	160	100	243	12	63	28	60	31	8	6306-ZZ	6205-ZZ	30*47*7	25*40*7	160	110	130	-	M8
3	4	Q3H100L4B70	Aluminium	196	482	1xM25	140	160	100	243	12	63	28	60	31	8	6306-ZZ	6205-ZZ	30*47*7	25*40*7	160	110	130	-	M8
4	2	Q3H112M2A70	Aluminium	219	497	1xM25	140	190	112	265	12	70	28	60	31	8	6306-ZZ	6206-ZZ	30*47*7	30*47*7	160	110	130	-	M8
7.5	4	Q3H132M4D70	Aluminium	219	497	1xM25	140	190	112	265	12	70	28	60	31	8	6306-ZZ	6206-ZZ	30*47*7	30*47*7	200	130	165	-	M10

DIMENSION B14b - B34b

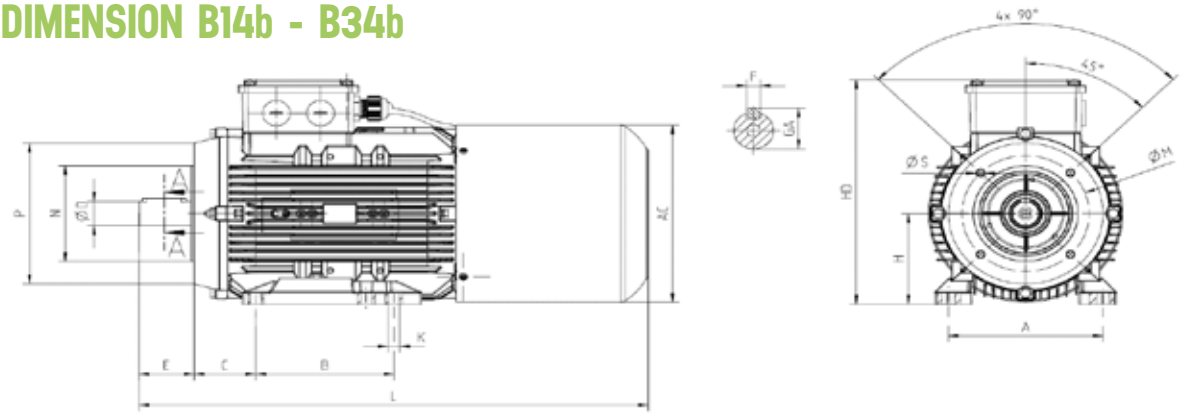

Power [kW]	Number of Poles	Motor Type	Housing Type	Main Dimensions			Foot Mounted Motors						Shaft				Bearing		Seal		Flange [FB B14b, B34b]				
				AC	L	O	B	A	H	HD	K	C	D[1]	E	GA	F[2]	Drive Side	Non drive Side	Drive Side	Non drive Side	P	N[3]	M	R	S
0.37	6	Q3H80M6A70	Aluminium	158	340	1xM20	100	125	80	216	10	50	19	40	21,5	6	6204-ZZ	6204-ZZ	20*30*7	20*30*7	160	110	130	-	M8
0.55	4	Q3H80M4A70	Aluminium	158	340	1xM20	100	125	80	216	10	50	19	40	21,5	6	6204-ZZ	6204-ZZ	20*30*7	20*30*7	160	110	130	-	M8
0.55	6	Q3H80M6B70	Aluminium	158	365	1xM20	100	125	80	216	10	50	19	40	21,5	6	6204-ZZ	6204-ZZ	20*30*7	20*30*7	160	110	130	-	M8
0.75	2	Q3H80M2A70	Aluminium	158	340	1xM20	100	125	80	216	10	50	19	40	21,5	6	6204-ZZ	6204-ZZ	20*30*7	20*30*7	160	110	130	-	M8
0.75	4	Q3H80M4B70	Aluminium	158	340	1xM20	100	125	80	216	10	50	19	40	21,5	6	6204-ZZ	6204-ZZ	20*30*7	20*30*7	160	110	130	-	M8
0.75	6	Q3H90S6A70	Aluminium	176	420	1xM25	100-125	140	90	223	10	56	24	50	27	8	6305-ZZ	6205-ZZ	25*40*7	25*40*7	160	110	130	-	M8
1.1	2	Q3H80M2B70	Aluminium	158	340	1xM20	100	125	80	216	10	50	19	40	21,5	6	6204-ZZ	6204-ZZ	20*30*7	20*30*7	160	110	130	-	M8
1.1	4	Q3H90S4A70	Aluminium	176	460	1xM25	100-125	140	90	223	10	56	24	50	27	8	6305-ZZ	6205-ZZ	25*40*7	25*40*7	160	110	130	-	M8
1.1	6	Q3H90L6B70	Aluminium	176	420	1xM25	100-125	140	90	223	10	56	24	50	27	8	6305-ZZ	6205-ZZ	25*40*7	25*40*7	160	110	130	-	M8
1.5	2	Q3H90S2A70	Aluminium	176	420	1xM25	100-125	140	90	223	10	56	24	50	27	8	6305-ZZ	6205-ZZ	25*40*7	25*40*7	160	110	130	-	M8
1.5	4	Q3H90L4A70	Aluminium	176	460	1xM25	100-125	140	90	223	10	56	24	50	27	8	6305-ZZ	6205-ZZ	25*40*7	25*40*7	160	110	130	-	M8
1.5	6	Q3H100L6A70	Aluminium	196	482	1xM25	140	160	100	243	12	63	28	60	31	8	6306-ZZ	6205-ZZ	30*47*7	25*40*7	200	130	165	-	M10
2.2	2	Q3H90L2A70	Aluminium	176	420	1xM25	100-125	140	90	223	10	56	24	50	27	8	6305-ZZ	6205-ZZ	25*40*7	25*40*7	160	110	130	-	M8
2.2	4	Q3H100L4A70	Aluminium	196	482	1xM25	140	160	100	243	12	63	28	60	31	8	6306-ZZ	6205-ZZ	30*47*7	25*40*7	200	130	165	-	M10
2.2	6	Q3H112M6A70	Aluminium	219	497	1xM25	140	190	112	265	12	70	28	60	31	8	6306-ZZ	6206-ZZ	30*47*7	30*47*7	200	130	165	-	M10
3	2	Q3H100L2A70	Aluminium	196	482	1xM25	140	160	100	243	12	63	28	60	31	8	6306-ZZ	6205-ZZ	30*47*7	25*40*7	200	130	165	-	M10
3	4	Q3H100L4B70	Aluminium	196	482	1xM25	140	160	100	243	12	63	28	60	31	8	6306-ZZ	6205-ZZ	30*47*7	25*40*7	200	130	165	-	M10
4	2	Q3H112M2A70	Aluminium	219	497	1xM25	140	190	112	265	12	70	28	60	31	8	6306-ZZ	6206-ZZ	30*47*7	30*47*7	200	130	165	-	M10
7.5	4	Q3H132M4D70	Aluminium	219	497	1xM25	140	190	112	265	12	70	28	60	31	8	6306-ZZ	6206-ZZ	30*47*7	30*47*7	250	180	215	-	M12

BRAKE MOTORS

BRAKE KIT

Flexibility - Our IEC standard motors can easily be converted into a brake motor within minutes using our modular brake kit

BRAKE KIT NOMENCLATURE

Default (2)	Frame (2)		NDE End-Shield Type (2)		Brand, rectifier (2)		Connection Diameter (3)		Brake Gear (1)		Brake Voltage (3)		Other (1)		Fan Cover Color (1)	
FK	H80	08	Normal, without friction plate	N0	Without Brake	00	72	072	Small	S	Without Brake	000	Without dust seal, Without hand-release	X	Without Paint	
	H90	09	Deep, without friction plate	L0	EMF, half wave	AA	90	090	Normal	N	24V DC	024	With dust seal, without hand-release	A	RAL 6011	W
	HS90	08	Normal, without friction plate, fixed NDE	N1	EMF, full wave	AB	112	112	Large	L	100V DC	100	Without dust seal, With hand-release	B	RAL 7015	H
	H100	10	Deep, without friction plate, fixed NDE	L1	EMF, half wave, microswitch	AC	132	132			180V DC	180	With dust seal, With hand-release	C	RAL 7030	L
	HS100	09	Normal, with friction plate	N2	EMF, full wave, microswitch	AD	145	145			220V AC	220			RAL 7031	O
	H112	11	Deep, with friction plate	L2	Temporiti, 1	BA	170	170			230V AC	230				
	HS112	10	Normal, with friction plate, fixed NDE	N3	Temporiti, 2	BB	196	196			380V AC	380				
	H132	13	Deep, with friction plate, fixed NDE	L3	Temporiti, 3	BC					400V AC	400				
	HS132	11			Temporiti, 4	BD										
	H160	16			Intorq	CA										
	HS160	13			Precima	DA										
	H180	18			Dereli	EA										
	H200	20														

Brake Connection Diameter	Gear Size	Gear Hub Dimension		
090	N	20x20	090N	20x20
112	S	15x20	112S	15x20
112	N	20x20	112N	20x20
132	S	20x20	132S	20x20
132	N	25x25	132N	25x25
145	S	20x20	145S	20x20
145	N	25x25	145N	25x25
170	S	25x25	170S	25x25
170	N	35x30	170N	35x30
196	N	35x30	196N	35x30

BRAKE MOTORS

MOTOR INFORMATION							BRAKE KIT (NO BRAKE)		BRAKE KIT (w/EMF Brake)	
Common SKU	POWER		Number of Poles	S/C/SC	Motor Torque (Nm)	Motor Voltage	Brake Kit Code	Brake Torque (Nm)	Brake Kit Code	Brake Torque (Nm)
	kW	HP								
Q3H80M2C	0.75	1.0	2	S	2,48	230/400V	FK08N000090N000X	12	FK08N0AA090N100X	12
Q3H80M2D	1.1	1.5	2	S	3,63	230/400V	FK08N000090N000X	12	FK08N0AA090N100X	12
Q3H80M4D	0.75	1.0	4	S	4,96	230/400V	FK08N000090N000X	12	FK08N0AA090N100X	12
Q3H80M2DE	1.5	2	2	C	4,93	230/400V	FK08L000090N000X	12	FK08L0AA090N100X	12
Q3H80M4DE	1.1	1.5	4	C	7,25	230/400V	FK08L000112N000X	26	FK08L0AA112N100X	26
Q2H80M2C	0.75	1.0	2	S	3,67	230/400V	FK08N000090N000X	12	FK08N0AA090N100X	12
Q2H80M4C	0.75	1.0	4	S	4,97	230/400V	FK08N000090N000X	12	FK08N0AA090N100X	12
Q2H80M2D	1.5	2	2	C	4,98	230/400V	FK08N000090N000X	12	FK08N0AA090N100X	12
Q2H80M2DE	2.2	3	2	C	7,32	230/400V	FK08L000112N000X	26	FK08L0AA112N100X	26
Q2H80M4D	1.1	1.5	4	C	7,35	230/400V	FK08N000112N000X	26	FK08N0AA112N100X	26
Q2H80M4DE	1.5	2	4	C	10,04	230/400V	FK08L000112N000X	26	FK08L0AA112N100X	26
Q3H80M4C	0.55	3/4	4	S	3,61	230/400V	FK08N000090N000X	12	FK08N0AA090N100X	12
Q3H80M6A	0.37	1/2	6	S	3,76	230/400V	FK08L000090N000X	12	FK08L0AA090N100X	12
Q3H80M6B	0.55	3/4	6	S	5,59	230/400V	FK08L000112N000X	26	FK08L0AA112N100X	26
Q3H90L2C	1.5/2	1.5/2	2	S	4,97	230/400V	FK09N000090N000X	12	FK09N0AA090N100X	12
Q3H90L2D	2.2/3	2.2/3	2	S	7,20	230/400V	FK09N000112N000X	26	FK09N0AA112N100X	26
Q3H90L4C	1.1	1.5	4	S	7,62	230/400V	FK09N000112N000X	26	FK09N0AA112N100X	26
Q3H90L4D	1.5	2	4	S	9,89	230/400V	FK09N000112N000X	26	FK09N0AA112N100X	26
Q3H90L6C	0.75	1.0	6	S	7,54	230/400V	FK09N000112N000X	26	FK09N0AA112N100X	26
Q3H90L6D	1.1	1.5	6	S	11,06	230/400V	FK09N000112N000X	26	FK09N0AA112N100X	26
Q3H90L2E	3	2	2	C	9,91	230/400V	FK09N000112N000X	26	FK09N0AA112N100X	26
Q3H90L4DE	2.2	3	4	C	14,46	230/400V	FK09L000132S000X	48	FK09L0AA132S100X	48
Q2H90S6B	0.75	1.0	6	S	7,60	230/400V	FK09N000112N000X	26	FK09N0AA112N100X	26
Q2H90L6C	1.1	1.5	6	S	11,20	230/400V	FK09N000112N000X	26	FK09N0AA112N100X	26
Q2H90L2D	3	4	2	C	9,92	230/400V	FK09N000112N000X	26	FK09N0AA112N100X	26
Q2H90L4D	2.2	3	4	C	14,62	230/400V	FK09N000132S000X	48	FK09N0AA132S100X	48
Q2H90L4DE	3	4	4	C	19,90	230/400V	FK09L000132S000X	48	FK09L0AA132S100X	48
Q2H90L2DE	4	5.5	2	SC	13,11	400/690V	FK09L000132S000X	48	FK09L0AA132S180X	48
Q3HS90S2C	1.5	2	2	S	4,92	230/400V	FK08L000112N000X	26	FK08L0AA112N100X	26
Q3HS90S4C	1.1	1.5	4	S	7,26	230/400V	FK08L000112N000X	26	FK08L0AA112N100X	26
Q2HS90S2B	1.5	2	2	S	4,98	230/400V	FK08N000112N000X	26	FK08N0AA112N100X	26
Q2HS90L2C	2.2	3	2	S	7,32	230/400V	FK08L000112N000X	26	FK08L0AA112N100X	26
Q2HS90S4B	1.1	1.5	4	S	7,35	230/400V	FK08N000112N000X	26	FK08N0AA112N100X	26
Q2HS90L4C	1.5	2	4	S	10,04	230/400V	FK08L000112N000X	26	FK08L0AA112N100X	26
Q3H100L4C	2.2	3	4	S	14,49	230/400V	FK10N000132N000X	48	FK10N0AA132N100X	48
Q3H100L4D	3	4	4	S	19,81	230/400V	FK10N000145N000X	80	FK10N0AA145N100X	80
Q3H100L6D	1.5	2	6	S	14,92	230/400V	FK10N000132N000X	48	FK10N0AA132N100X	48

BRAKE MOTORS

MOTOR INFORMATION							BRAKE KIT [NO BRAKE]		BRAKE KIT [w/EMF Brake]	
Common SKU	POWER		Number of Poles	S/C/SC	Motor Torque [Nm]	Motor Voltage	Brake Kit Code	Brake Torque [Nm]	Brake Kit Code	Brake Torque [Nm]
	kW	HP								
Q3H100L2DE	3	4	2	C	13,01	400/690V	FK10N000132S000X	48	FK10N0AA132S180X	48
Q3H100L4E	4	5.5	4	C	26,44	400/690V	FK10L000145N000X	80	FK10L0AA145N180X	80
Q3H100L2D	3	4	2	S	9,73	230/400V	FK10N000132S000X	48	FK10N0AA132S100X	48
Q3H100L2E	5	7	2	SC	17,91	400/690V	FK10L000145N000X	80	FK10L0AA145N180X	80
Q2H100L6C	1.5	2	6	S	15,00	230/400V	FK10N000132N000X	48	FK10N0AA132N100X	48
Q2H100L4D	2.2	3	4	C	26,53	400/690V	FK10N000145N000X	80	FK10N0AA145N180X	80
Q2H100L2DE	5	7	2	SC	18,05	400/690V	FK10N000132S000X	48	FK10N0AA132S180X	48
Q2H100L2E	7.5	10	2	SC	24,74	400/690V	FK10L000145N000X	80	FK10L0AA145N180X	80
Q3HS100L2C	3	4	2	S	9,91	230/400V	FK09N000112N000X	26	FK09N0AA112N100X	26
Q3HS100L4C	2.2	3	4	S	14,56	230/400V	FK09L000132S000X	48	FK09L0AA132S100X	48
Q2HS100L2B	3	4	2	S	9,92	230/400V	FK09N000112N000X	26	FK09N0AA112N100X	26
Q2HS100L4B	2.2	3	4	S	14,62	230/400V	FK09N000132S000X	48	FK09N0AA132S100X	48
Q2HS100L4C	3	4	4	S	19,90	230/400V	FK09L000132N000X	48	FK09L0AA132N100X	48
Q2HS100L2C	4	5.5	2	C	13,11	400/690V	FK09L000132S000X	48	FK09L0AA132S180X	48
Q3H112M4D	4	5.5	4	S	26,31	400/690V	FK11N000145N000X	80	FK11N0AA145N180X	80
Q3H112M6D	2.2	3	6	S	21,95	230/400V	FK11N000145N000X	80	FK11N0AA145N100X	80
Q3H112M2C	4	5.5	2	S	13,04	400/690V	FK11N000132N000X	48	FK11N0AA132N180X	48
Q3H112M2D	5.5	7.5	2	C	17,99	400/690V	FK11N000145N000X	80	FK11N0AA145N180X	80
Q3H112M2DE	7	10	2	C	24,55	400/690V	FK11L000145N000X	80	FK11L0AA145N180X	80
Q3H112M4E	4	5.5	4	C	36,40	400/690V	FK11L000145N000X	80	FK11L0AA145N180X	80
Q2H112M6C	2.2	3	6	S	22,30	230/400V	FK11N000145N000X	80	FK11N0AA145N100X	80
Q2H112M4D	5.5	7.5	4	C	36,35	400/690V	FK11N000145N000X	80	FK11N0AA145N180X	80
Q3HS112M2C	4	5.5	2	S	13,01	400/690V	FK10N000132S000X	48	FK10N0AA132S180X	48
Q2HS112M2B	4	5.5	2	S	13,17	400/690V	FK10N000132S000X	48	FK10N0AA132S180X	48
Q2HS112M4C	4	5.5	4	S	26,53	400/690V	FK10N000145N000X	80	FK10N0AA145N180X	80
Q2HS112M2C	5.5	7.5	2	C	18,05	400/690V	FK10N000132S000X	48	FK10N0AA132S180X	48
Q2HS112M2D	7.5	10	2	C	24,74	400/690V	FK10N000145N000X	80	FK10N0AA145N180X	80
Q4H132S2D	5.5	7.5	2	S	17,84	400/690V	FK13N000145N000X	80	FK13N0AA145N180X	80
Q4H132S2DE	7.5	10	2	S	24,39	400/690V	FK13N000145N000X	80	FK13N0AA145N180X	80
Q4H132S4C	5.5	7.5	4	S	35,63	400/690V	FK13N000170S000X	120	FK13N0AA170S180X	120
Q4H132M4DE	7.5	10	4	S	48,89	400/690V	FK13N000170S000X	120	FK13N0AA170S180X	120
Q3H132S4B	5.5	7.5	4	S	35,80	400/690V	FK13N000170S000X	120	FK13N0AA170S180X	120
Q3H132M4D	7.5	10	4	S	48,82	400/690V	FK13N000170S000X	120	FK13N0AA170S180X	120
Q3H132S6A	3	4	6	S	29,29	230/400V	FK13N000145N000X	80	FK13N0AA145N100X	80
Q3H132M6A	4	5.5	6	S	39,18	400/690V	FK13N000170S000X	120	FK13N0AA170S180X	120
Q3H132M6B	5.5	7.5	6	S	54,09	400/690V	FK13N000170N000X	120	FK13N0AA170N180X	120
Q3H132S2C	5.5	7.5	2	S	17,99	400/690V	FK13N000145N000X	80	FK13N0AA145N180X	80
Q3H132S2D	7.5	10	2	S	24,28	400/690V	FK13N000145N000X	80	FK13N0AA145N180X	80
Q3H132M2A	11	15	2	C	35,91	400/690V	FK13N000170S000X	120	FK13N0AA170S180X	120

BRAKE MOTORS

MOTOR INFORMATION							BRAKE KIT (NO BRAKE)		BRAKE KIT (w/EMF Brake)	
Common SKU	POWER		Number of Poles	S/C/SC	Motor Torque (Nm)	Motor Voltage	Brake Kit Code	Brake Torque (Nm)	Brake Kit Code	Brake Torque (Nm)
	kW	HP								
Q3H132M2B	15	20	2	C	48,81	400/690V	FK13L000170S000X	120	FK13L0AA170S180X	120
Q3H132M4E	7.5	10	4	C	71,46	400/690V	FK13L000196N000X	240	FK13L0AA196N180X	240
Q2H132M4C	7.5	10	4	S	49,06	400/690V	FK13N000170S000X	120	FK13N0AA170S180X	120
Q2H132S6A	3	4	6	S	29,69	230/400V	FK13N000145N000X	80	FK13N0AA145N100X	80
Q2H132M6A	4	5.5	6	S	39,38	400/690V	FK13N000170S000X	120	FK13N0AA170S180X	120
Q2H132M6B	5.5	7.5	6	S	54,71	400/690V	FK13N000170S000X	120	FK13N0AA170S180X	120
Q2H132M2A	11	15	2	C	35,94	400/690V	FK13N000170S000X	120	FK13N0AA170S180X	120
Q2H132M2B	15	20	2	C	49,14	400/690V	FK13N000170S000X	120	FK13N0AA170S180X	120
Q2H132M2C	18.5	25	2	C	60,30	400/690V	FK13L000196N000X	240	FK13L0AA196N180X	240
Q2H132M4D	11	15	4	C	71,56	400/690V	FK13L000196N000X	240	FK13L0AA196N180X	240
Q2H132M4E	15	20	4	C	97,98	400/690V	FK13L000196N000X	240	FK13L0AA196N180X	240
Q3HS132S2C	5.5	7.5	2	S	18,00	400/690V	FK11N000145N000X	80	FK11N0AA145N180X	80
Q3HS132S2D	7.5	10	2	S	24,55	400/690V	FK11L000145N000X	80	FK11L0AA145N180X	80
Q2HS132S2B	5.5	7.5	2	S	18,02	400/690V	FK11N000145N000X	80	FK11N0AA145N180X	80
Q2HS132S2C	7.5	10	2	S	24,70	400/690V	FK11N000145N000X	80	FK11N0AA145N180X	80
Q2HS132S4A	5.5	7.5	4	S	36,35	400/690V	FK11N000145N000X	80	FK11N0AA145N180X	80
Q3H100L6C	1.1	1.1/1.5	6	S	11,06	230/400V	FK10N000112N000X	26	FK10N0AA112N100X	26
Q4H100L2D	3	4	2	S	9,71	230/400V	FK10N000132S000X	48	FK10N0AA132S100X	48
Q4H100L4E	3	4	4	S	20,11	230/400V	FK10L000145N000X	80	FK10L0AA145N100X	80
Q4H112M4E	4	5.5	4	S	26,71	400/690V	FK11L000145N000X	80	FK11L0AA145N180X	80
Q3H132S2DE	9	12	2	C	29,09	400/690V	FK13N000145N000X	80	FK13N0AA145N180X	80
Q4H132M2AE	11	15	2	C	35,73	400/690V	FK13L000170S000X	120	FK13L0AA170S180X	120
Q4H80M2D	0.75	1.0	2	S	2,43	230/400V	FK08N000090N000X	12	FK08N0AA090N100X	12
Q4H80M4E	0.75	1.0	4	S	5,08	230/400V	FK08L000090N000X	12	FK08L0AA090N100X	12
Q3H90L4E	1.5	2	4	S	10,20	230/400V	FK09N000112N000X	26	FK09N0AA112N100X	26
Q4H90L2D	1.5	2	2	S	4,86	230/400V	FK09N000090N000X	12	FK09N0AA090N100X	12
Q4H90L2E	2.2	3	2	S	7,11	230/400V	FK09N000112N000X	26	FK09N0AA112N100X	26
Q4H90L4E	1.5	2	4	S	10,31	230/400V	FK09N000112N000X	26	FK09N0AA112N100X	26
Q4H90L4D	1.1	1.5	4	S	7,45	230/400V	FK09N000112N000X	26	FK09N0AA112N100X	26
Q3HS132S4B	5.5	7.5	2	S	36,99	230/400V	FK11L000145N000X	80	FK11L0AA145N100X	80
Q4H80M4D	0.55	3/4	4	S	3,74	230/400V	FK08N000090N000X	12	FK08N0AA090N100X	12
Q4H100L6A	1.1	1.5	6	S	11,12	230/400V	FK10N000112N000X	26	FK10N0AA112N100X	26
Q4H80M2DE	1.1	1.5	2	S	3,57	230/400V	FK08L000090N000X	12	FK08L0AA090N100X	12
Q4H100L4C	1.5	2	4	S	10,16	230/400V	FK10N000132N000X	48	FK10N0AA132N100X	48
Q4H100L4D	2.2	3	4	S	14,80	230/400V	FK10N000132N000X	48	FK10N0AA132N100X	48
Q4H112M4D	3	4	4	S	20,32	230/400V	FK11L000145N000X	80	FK11L0AA145N100X	80
Q4H112M2D	4	5.5	2	S	12,91	400/690V	FK11N000132S000X	48	FK11N0AA132S180X	48

BRAKE KIT DIMENSIONS
(Based on EMF Brand Brake)

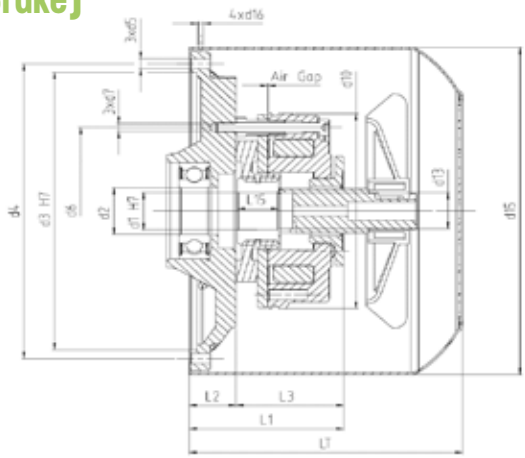

Brake kit SKU	Mn (max)	d1 H7	d2 f6	d3 H7	d4	d5	d6	d7	d10	d13	d15	d16	L1	L2 h11	L3	L15	Lt	Air gap	"Mass (only brake)"
FK08L0AA090N100X	12	20	20	140,5	149,6	M5	90	3xM5	105	20	155,5	4xM4	99,0	54,0	45	20	159,0	0,25	2 kg
FK08L0AA112N100X	26	20	20	140,5	149,6	M5	112	3xM6	130	20	155,5	4xM4	104,0	54,0	50	20	159,0	0,25	3,6 kg
FK08N0AA090N100X	12	20	20	140,5	149,6	M5	90	3xM5	105	20	155,5	4xM4	73,7	28,7	45	20	130,0	0,25	2 kg
FK08N0AA112N100X	26	20	20	140,5	149,6	M5	112	3xM6	130	20	155,5	4xM4	78,7	28,7	50	20	130,0	0,25	3,6 kg
FK09L0AA112N100X	26	20	20	149,5	158,6	M5	112	3xM6	130	20	174,0	4xM5	110,0	60,0	50	20	176,5	0,25	3,6 kg
FK09L0AA112N180X	26	20	20	149,5	158,6	M5	112	3xM6	130	20	174,0	4xM5	110,0	60,0	50	20	176,5	0,25	3,6 kg
FK09L0AA132N100X	48	25	25	149,5	158,6	M5	132	3xM6	150	25	174,0	4xM5	118,0	60,0	58	25	176,5	0,30	5,6 kg
FK09L0AA132S100X	48	20	20	149,5	158,6	M5	132	3xM6	150	20	174,0	4xM5	118,0	60,0	58	20	176,5	0,30	5,6 kg
FK09L0AA132S180X	48	20	20	149,5	158,6	M5	132	3xM6	150	20	174,0	4xM5	118,0	60,0	58	20	176,5	0,30	5,6 kg
FK09N0AA090N100X	12	20	20	149,5	158,6	M5	90	3xM5	105	20	174,0	4xM5	67,5	22,5	45	20	133,5	0,25	2 kg
FK09N0AA112N100X	26	20	20	149,5	158,6	M5	112	3xM6	130	20	174,0	4xM5	72,5	22,5	50	20	133,5	0,25	3,6 kg
FK09N0AA132S100X	48	20	20	149,5	158,6	M5	132	3xM6	150	20	174,0	4xM5	80,5	22,5	58	20	133,5	0,30	5,6 kg
FK10L0AA132N100X	48	25	25	166,0	178,0	M5	132	3xM6	150	25	192,0	4xM4	98,5	40,5	58	25	144,0	0,30	5,6 kg
FK10L0AA132N180X	48	25	25	166,0	178,0	M5	132	3xM6	150	25	192,0	4xM4	98,5	40,5	58	25	144,0	0,30	5,6 kg
FK10L0AA145N100X	80	25	25	166,0	178,0	M5	145	3xM8	165	25	192,0	4xM4	112,5	40,5	72	25	144,0	0,30	7,9 kg
FK10L0AA145N180X	80	25	25	166,0	178,0	M5	145	3xM8	165	25	192,0	4xM4	112,5	40,5	72	25	144,0	0,30	7,9 kg
FK10N0AA112N100X	26	20	20	166,0	178,0	M5	112	3xM6	130	20	192,0	4xM4	76,0	26,0	50	20	139,0	0,25	3,6 kg

BRAKE MOTORS

Brake kit SKU	Mn (max)	d1 H7	d2 f6	d3 H7	d4	d5	d6	d7	d10	d13	d15	d16	L1	L2 h11	L3	L15	Lt	Air gap	"Mass (only brake)"
FK10N0AA112N180X	26	20	20	166,0	178,0	M5	112	3xM6	130	20	192,0	4xM4	76,0	26,0	50	20	139,0	0,25	3,6 kg
FK10N0AA132N100X	48	25	25	166,0	178,0	M5	132	3xM6	150	25	192,0	4xM4	84,0	26,0	58	25	139,0	0,30	5,6 kg
FK10N0AA132N180X	48	25	25	166,0	178,0	M5	132	3xM6	150	25	192,0	4xM4	84,0	26,0	58	25	139,0	0,30	5,6 kg
FK10N0AA132S100X	48	20	20	166,0	178,0	M5	132	3xM6	150	20	192,0	4xM4	84,0	26,0	58	20	139,0	0,30	5,6 kg
FK10N0AA132S180X	48	20	20	166,0	178,0	M5	132	3xM6	150	20	192,0	4xM4	84,0	26,0	58	20	139,0	0,30	5,6 kg
FK10N0AA145N100X	80	25	25	166,0	178,0	M5	145	3xM8	165	25	192,0	4xM4	98,0	26,0	72	25	139,0	0,30	7,9 kg
FK10N0AA145N180X	80	25	25	166,0	178,0	M5	145	3xM8	165	25	192,0	4xM4	98,0	26,0	72	25	139,0	0,30	7,9 kg
FK11L0AA132N100X	48	25	25	182,0	193,0	M6	132	3xM6	150	25	216,0	4xM6	109,0	51,0	58	25	194,0	0,30	5,6 kg
FK11L0AA132N180X	48	25	25	182,0	193,0	M6	132	3xM6	150	25	216,0	4xM6	109,0	51,0	58	25	194,0	0,30	5,6 kg
FK11L0AA145N100X	80	25	25	182,0	193,0	M6	145	3xM8	165	25	216,0	4xM6	123,0	51,0	72	25	194,0	0,30	7,9 kg
FK11L0AA145N180X	80	25	25	182,0	193,0	M6	145	3xM8	165	25	216,0	4xM6	123,0	51,0	72	25	194,0	0,30	7,9 kg
FK11N0AA112N180X	26	20	20	182,0	193,0	M6	112	3xM6	130	20	216,0	4xM6	81,0	27,5	50	20	165,0	0,25	3,6 kg
FK11N0AA132S180X	48	20	20	182,0	193,0	M6	112	3xM6	150	20	216,0	4xM6	85,5	27,5	58	20	165,0	0,30	5,6 kg
FK11N0AA132N100X	48	25	25	182,0	193,0	M6	132	3xM6	150	25	216,0	4xM6	85,5	27,5	58	25	165,0	0,30	5,6 kg
FK11N0AA132N180X	48	25	25	182,0	193,0	M6	132	3xM6	150	25	216,0	4xM6	85,5	27,5	58	25	165,0	0,30	5,6 kg
FK11N0AA145N100X	80	25	25	182,0	193,0	M6	145	3xM8	165	25	216,0	4xM6	99,5	27,5	72	25	165,0	0,30	7,9 kg
FK11N0AA145N180X	80	25	25	182,0	193,0	M6	145	3xM8	165	25	216,0	4xM6	99,5	27,5	72	25	165,0	0,30	7,9 kg
FK13L0AA145N180X	80	25	25	225,0	241,0	M8	145	3xM8	165	25	253,0	4xM5	156,0	84,0	72	25	234,0	0,30	7,9 kg
FK13L0AA170N180X	120	35	35	225,0	241,0	M8	170	3xM8	190	35	253,0	4xM5	162,0	84,0	78	30	234,0	0,30	11,8 kg
FK13L0AA170S180X	120	25	25	225,0	241,0	M8	170	3xM8	190	25	253,0	4xM5	162,0	84,0	78	25	234,0	0,30	11,8 kg
FK13L0AA196N180X	240	35	35	225,0	241,0	M8	196	6xM8	217	35	253,0	4xM5	169,0	84,0	85	30	234,0	0,40	18,4 kg
FK13N0AA132N100X	48	25	25	225,0	241,0	M8	132	3xM6	150	25	253,0	4xM5	85,5	27,5	58	25	143,0	0,30	5,6 kg
FK13N0AA132N180X	48	25	25	225,0	241,0	M8	132	3xM6	150	25	253,0	4xM5	85,5	27,5	58	25	143,0	0,30	5,6 kg
FK13N0AA145N100X	80	25	25	225,0	241,0	M8	145	3xM8	165	25	253,0	4xM5	99,5	27,5	72	25	143,0	0,30	7,9 kg
FK13N0AA145N180X	80	25	25	225,0	241,0	M8	145	3xM8	165	25	253,0	4xM5	99,5	27,5	72	25	143,0	0,30	7,9 kg
FK13N0AA170N180X	120	35	35	225,0	241,0	M8	170	3xM8	190	35	253,0	4xM5	105,5	27,5	78	30	143,0	0,30	11,8 kg
FK13N0AA170S180X	120	25	25	225,0	241,0	M8	170	3xM8	190	25	253,0	4xM5	105,5	27,5	78	25	143,0	0,30	11,8 kg

SINGLE PHASE MOTORS

SINGLE PHASE MOTORS

TECHNICAL DOCUMENTATION

Motors are manufactured in IEC 63-100 frame size as single phase, fully closed, short-circuit rotor and fan cooling.

Motors have been designed according to 230V, 50Hz as standard. Motors with other voltage and 60Hz frequency rating can be manufactured on demand.

QM type single phase motors are with run capacitors and QC type single phase motors are with start and run capacitors.

Q2M type motors with run capacitor:
400V run capacitor is used in the motors.

QC type motors with start and run capacitor:
Motors have electronic relay as well as 400V run capacitor and start capacitor. These type of motors with high startup moment have the capability of 300 start/stop per hour.

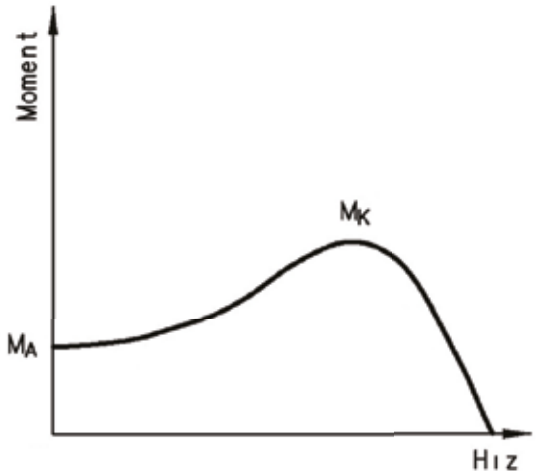

Torque-Speed curve of Q2M type motors with run capacitor

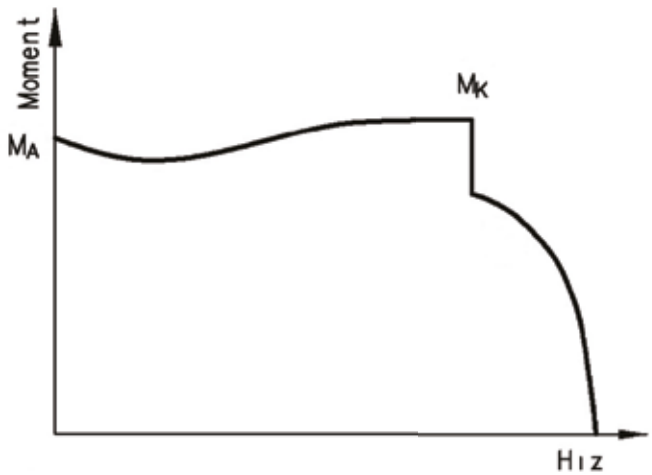

Torque-Speed curve of Q2C type motors with start and run capacitor

ELECTRICAL CHARACTERISTICS @ 50 Hz

	MOTOR TYPE	HOUSING TYPE	RATED VALUES					STARTING VALUES		Breakdown Torque Ratio	EFFICIENCY *			Cosφ		J	Weight (B3)
			Power		SPEED	CURRENT	TORQUE	CURRENT	TORQUE		η %						
			HP	kW	rpm	A	Nm	IA / IN	MA / MN	Mk/ Mn	4/4	3/4	2/4	4/4	µF	kgm³	kg
	2 pole 3000 rpm																
230 V/50 Hz	Q2M 63M2A	Aluminium	1/4	0,18	2783	1,40	0,62	3,70	0,80	2,30	60,4	54,6	44,7	0,96	10,0	0,00021	5,35
	Q2M 63M2B	Aluminium	1/3	0,25	2840	1,80	0,84	5,00	0,70	2,70	64,8	58,6	49,4	0,97	15,0	0,00026	6,20
	Q2M 63M2D	Aluminium	3/4	0,55	2853	3,80	1,84	2,80	0,50	1,50	74,1	63,4	54,2	0,93	12,5	0,00030	7,60
	Q2M 71M2K	Aluminium	1/4	0,18	2800	1,26	0,61	3,50	0,70	2,00	60,4	54,2	43,7	0,99	12,5	0,00028	6,50
	Q2M 71M2A	Aluminium	1/3	0,25	2780	1,79	0,86	4,00	0,70	1,92	64,8	57,7	45,6	0,98	12,5	0,00035	6,00
	Q2M 71M2B	Aluminium	1/2	0,37	2877	2,90	1,23	3,00	0,80	2,80	69,5	62,5	51,5	0,85	35,0	0,00040	7,20
	Q2M 71M2C	Aluminium	3/4	0,55	2750	3,40	1,91	4,20	0,60	2,20	74,1	71,4	63,2	0,99	30,0	0,00051	9,40
	Q2MN 80S2A	Aluminium	3/4	0,55	2800	3,40	1,88	4,10	0,73	2,51	74,1	68,2	62,3	0,99	30,0	0,00122	9,60
	Q2MN 80S2B	Aluminium	1,0	0,75	2840	4,30	2,52	3,95	0,65	2,20	77,4	73,2	64,2	0,99	35,0	0,00138	10,80
	Q2MN 80L2A	Aluminium	1,5	1,1	2800	6,20	3,75	3,18	0,57	2,00	79,6	76,1	68,2	0,99	45,0	0,00160	12,40
	Q2MN 90L2A	Aluminium	1,5	1,1	2812	6,20	3,74	2,90	0,60	1,90	79,6	76,1	69,1	0,99	40,0	0,00118	14,80
	Q2MN 90L2B	Aluminium	2,0	1,5	2830	8,50	5,06	3,10	0,60	1,90	81,3	80,3	74,4	0,99	60,0	0,00152	16,50
	Q2MN 90L2C	Aluminium	3,0	2,2	2888	6,47	7,27	4,60	0,65	2,10	74,0	71,1	69,3	0,99	50,0	0,00172	18,00
	Q2MN 100L2B	Aluminium	4,0	3,0	2820	18,70	10,16	2,50	0,40	1,80	75,0	72,1	70,3	0,99	80,0	0,00213	22,00
	4 pole 1500 rpm																
230 V/50 Hz	Q2M 63M4A	Aluminium	1/6	0,12	1395	1,00	0,82	2,8	0,50	1,80	59,1	51,70	39,80	0,96	8,0	0,00025	5,20
	Q2M 63M4B	Aluminium	1/4	0,18	1403	1,40	1,23	2,2	0,50	1,90	64,7	56,10	44,20	0,96	10,0	0,00071	5,40
	Q2M 71M4K	Aluminium	1/6	0,12	1430	0,90	0,80	3,1	0,65	2,00	59,1	52,10	40,50	0,91	10,0	0,00095	6,20
	Q2M 71M4A	Aluminium	1/4	0,18	1438	1,25	1,20	3,5	0,70	2,00	64,7	55,00	44,00	0,98	12,5	0,00107	7,40
	Q2M 71M4B	Aluminium	1/3	0,25	1420	1,60	1,68	3,0	0,60	2,10	68,5	61,50	50,50	0,99	15,0	0,00167	7,80
	Q2M 71M4C	Aluminium	1/2	0,37	1413	2,40	2,50	3,0	0,70	2,10	72,7	66,50	55,00	0,97	20,0	0,00204	9,50
	Q2MN 80S4A	Aluminium	1/2	0,37	1415	2,30	2,50	3,6	0,76	2,00	72,7	67,90	60,20	0,98	20,0	0,00200	10,00
	Q2MN 80L4A	Aluminium	3/4	0,55	1400	3,30	3,75	2,4	0,61	1,71	77,1	72,10	66,20	0,99	25,0	0,00237	11,50
	Q2MN 80L4B	Aluminium	1,0	0,75	1387	4,30	5,16	3,5	0,65	1,75	79,6	74,50	66,00	0,98	30,0	0,00290	12,80
	Q2MN 90L4A	Aluminium	1,0	0,75	1448	4,30	4,95	3,0	0,50	1,90	77,4	76,00	66,10	0,99	35,0	0,00351	13,80
	Q2MN 90L4B	Aluminium	1,5	1,1	1408	6,15	7,46	3,3	0,70	2,00	81,4	77,20	67,90	0,99	40,0	0,00471	15,30
	Q2MN 90L4C	Aluminium	2,0	1,5	1400	10,50	10,23	5,0	0,55	1,60	76,0	73,30	70,00	0,99	50,0	0,00351	18,00
	Q2MN 100L4B	Aluminium	3,0	2,2	1400	14,50	15,01	3,0	0,55	1,80	76,0	73,10	71,50	0,99	75,0	0,00471	24,00

SINGLE PHASE MOTORS

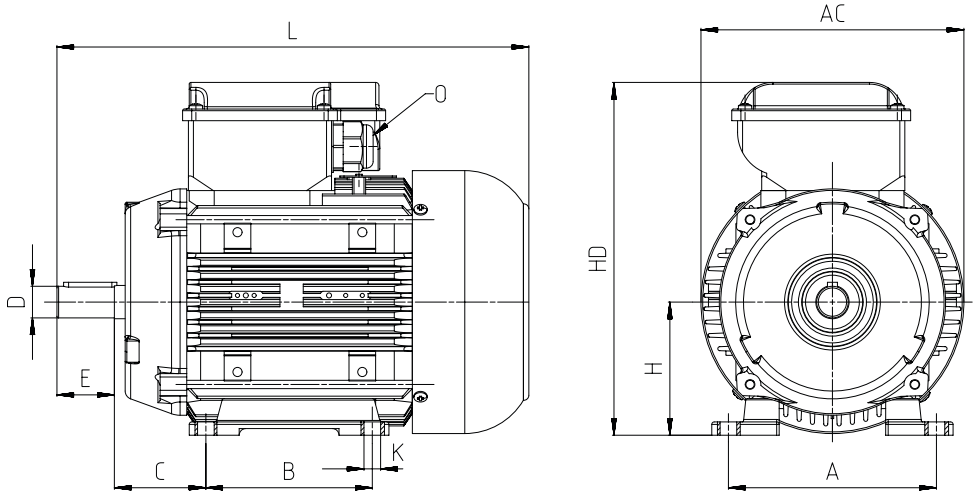

B3-B6-B7-B8-V5-V6

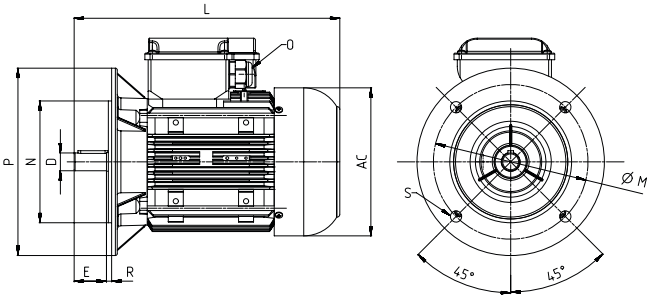

B14-V18-V19

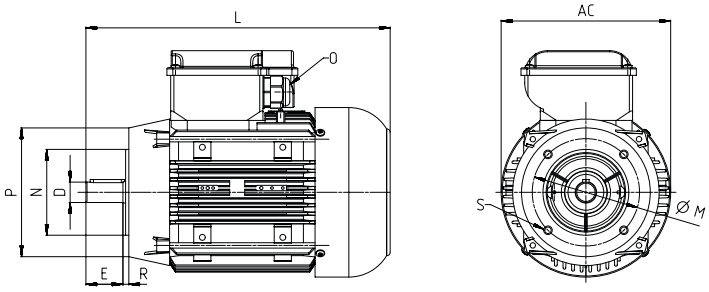

B5-V1-V3

Frame Size	Housing Type	Number of Poles	Main Dimensions			Foot Mounted Motors						Shaft				Bearing		Seal				Flange (FA B5, B35)				
			AC	L	O	B	A	H	HD	K	C	D[1]	E	GA	F[2]	Drive Side	Non drive Side	Drive Side	Non drive Side	Mounting Type	Flange	P	N[3]	M	R	S
63 M	Aluminium	2...4	123	220[5]	1*M20	80	100	63	182	7	40	11	23	12,5	4	6201-2Z	6201-2Z	12*22*7	12*22*7	B5	FA	140	95	115	0	10
																				B14	FB	120	80	100	0	M6
																				B14	FC	90	60	75	0	M5
71 M	Aluminium	2...4	138	252[6]	1*M20	90	112	71	198	7	45	14	30	16,0	5	6202-2Z	6202-2Z	15*24*5	15*24*5	B5	FA	160	110	130	0	10
																				B14	FB	140	95	115	0	M8
																				B14	FC	105	70	85	0	M6
80 M	Aluminium	2...4	156	255,0	1*M20	100	125	80	215	10	50	19	40	21,5	6	6204-2Z	6204-2Z	20*30*7	20*30*7	B5	FA	198	130	165	0	12
																				B14	FB	160	110	130	0	M8
80 L				270,0																B14	FC	117	80	100	0	M6
90 L	Aluminium	2...4	176	320,0	1*M20	100	140	90	241	10	56	24	50	27,0	8	6205-2Z	6205-2Z	25*40*7	25*40*7	B5	FA	200	130	165	0	12
																				B14	FB	160	110	130	0	M8
90 LH				355,0		125														B14	FC	140	95	115	0	M8
100 L	Aluminium	2...4	196	370,0	1*M25	140	160	100	262	12	63	28	60	31,0	8	6206-2Z	6206-2Z	30*47*8	30*47*8	B5	FA	250	180	215	0	15
																				B14	FB	160	110	130	0	M8
																				B14z	FC	200	130	165	0	M10

Dimensions are in mm

[1] Tolerance DIN EN 50347 "j6"
[2] According to DIN 6885
[3] Tolerance DIN EN 50347 "j6"
[4] IP55
[5] Q2M63M2B and Q2M63M2D length 234 mm
[6] Q2M71M2C length 262mm

SPECIAL MOTORS

SPECIAL MOTORS

DOUBLE VOLTAGE MOTORS

9-lead motors with YY / Y connection and 12-lead motors with Δ/YY/Y connection. Generally designed for 230/460V 60Hz operating values, these motors address different mains voltage needs.

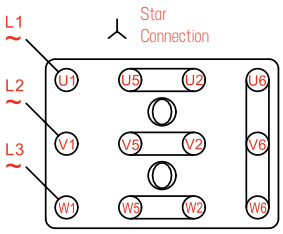

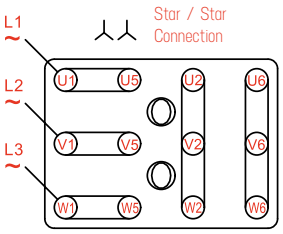

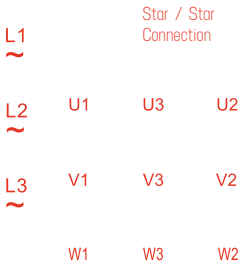

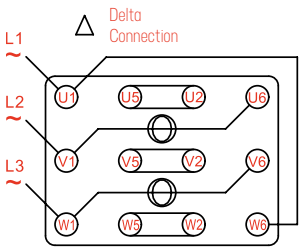

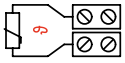

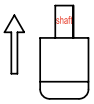

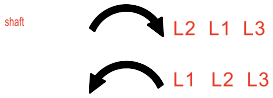

SEPARATE WINDING MOTORS

9-lead motors with YY / Y connection and 12-lead motors with Δ/YY/Y connection. Generally designed for 230/460V 60Hz operating values, these motors address different mains voltage needs.

Q1E112M2/12D 380V 50Hz 4.9/0.8kW 2900/385 d/d

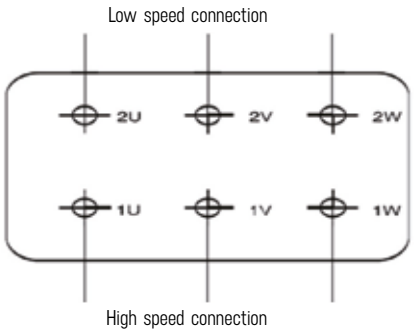

ANTI-CONDENSATION HEATER

Humidity, particularly on motor windings operating in humid environment, reduces insulation resistance and causes shorter motor life. In such applications, with the heaters placed on motor winding, the humidity of windings are removed before starting the motor.

H INSULATION CLASS MOTORS

Our standard motors have Class F insulation. However, we also manufacture motors with Class H insulation.

Ambient Temperature	Winding Temperature Rise Limit	Tolerance
40	125	15
180 °		

UL CERTIFIED MOTORS

We also manufacture UL certified motors upon request.

BUREAU VERITAS CERTIFIED MOTORS

We also produce Bureu Veritas Certified marine motors upon request

SPECIAL VOLTAGE MOTORS

Different from standard voltages, we also manufacture motors in different voltage steps (290/500V, 330/570V etc) upon request.

SPECIAL FREQUENCY MOTORS

Different from standard frequencies, we also manufacture motors in different frequencies (32Hz, 87Hz etc) upon request.

SPECIAL BEARING MOTORS

We manufacture motors with bearings that suit to various temperature steps (150°C , 200°C etc) and axial-radial loads for different applications.

OTHER SPECIAL APPLICATIONS

- Special axle or double axle motors
- Special flange motors
- Fixed bearing motors
- Drain hole to remove condensation
- Use of thermic or thermistor to prevent motor winding temperature from rising above limit values
- Inverter duty motors

MOTOR PART LIST

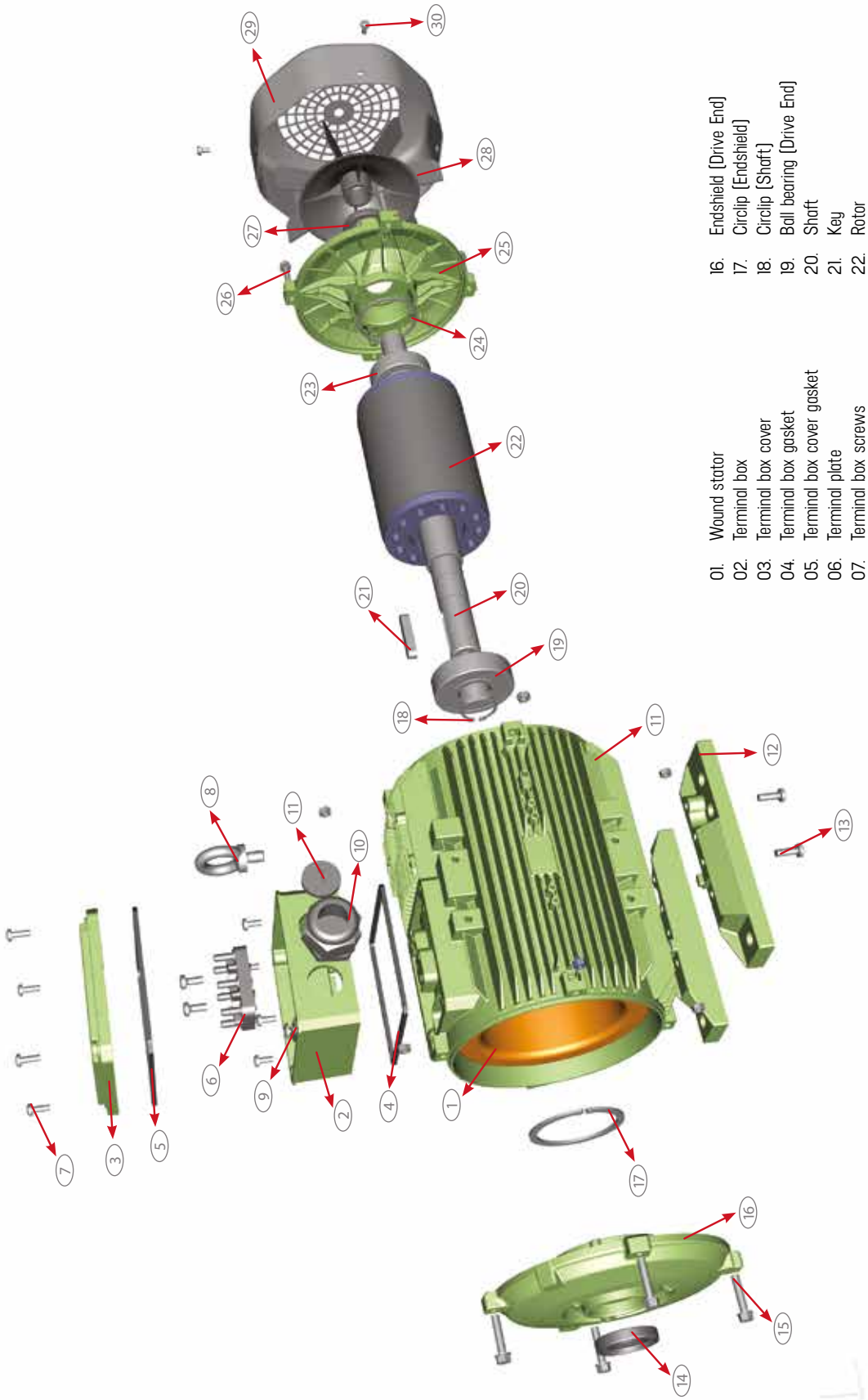

01. Wound stator
02. Terminal box
03. Terminal box cover
04. Terminal box gasket
05. Terminal box cover gasket
06. Terminal plate
07. Terminal box screws
08. Eyebolt
09. Grounding screw
10. Cable gland
11. Blind Plug
12. Foot
13. Foot screws
14. Seal [Drive End]
15. Endshield screws [Drive End]
16. Endshield [Drive End]
17. Circlip [Endshield]
18. Circlip [Shaft]
19. Ball bearing [Drive End]
20. Shaft
21. Key
22. Rotor
23. Ball bearing [Non-drive End]
24. Spring washer
25. Endshield [Non-drive End]
26. Endshield screws [Non-drive End]
27. Seal [Non-drive End]
28. Fan
29. Fan cover
30. Fan cover screws

MANAGEMENT OF WASTE MOTORS AND PARTS

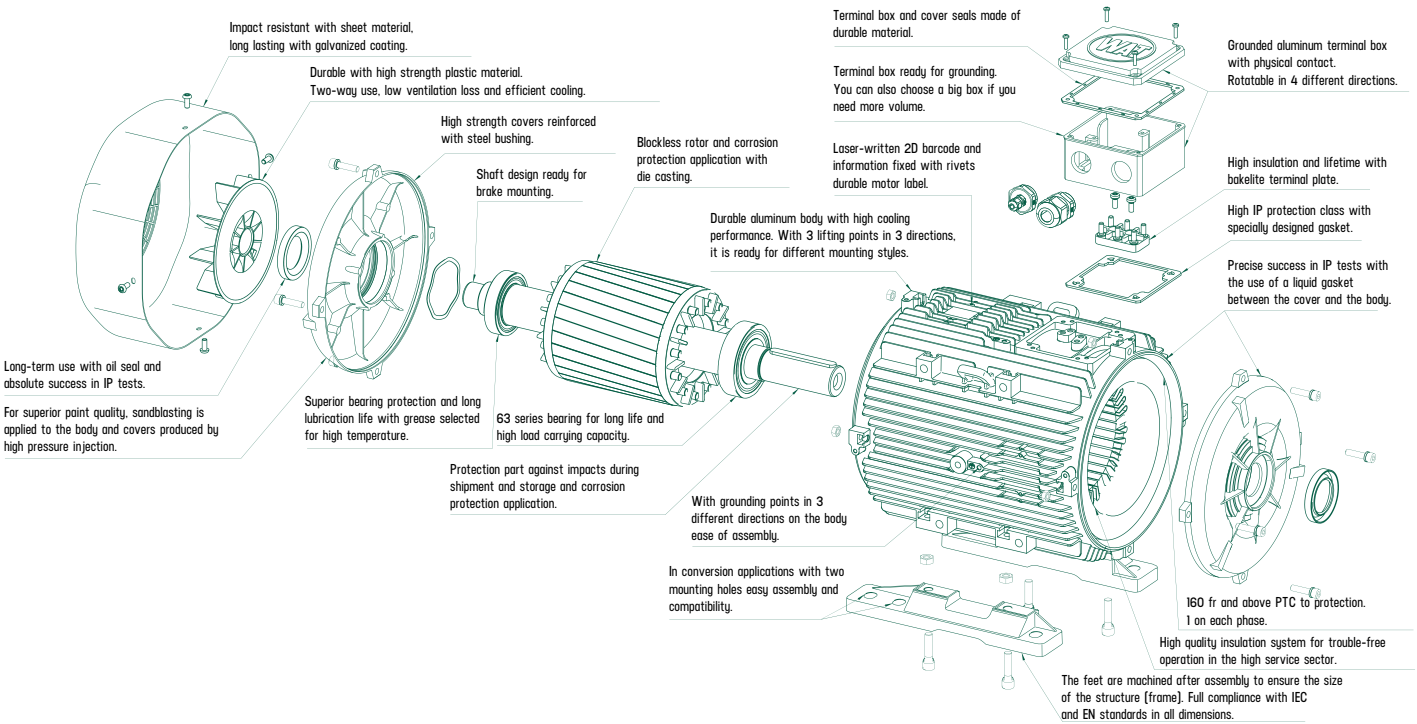

WHAT IS A WASTE MOTOR?

By definition, an electric motor is a device that converts electrical energy into mechanical energy. An electric motor consists of a stationary (stator) and a rotating (rotor or inductor) consists of two main moving parts. These main parts are the parts that conduct electric current, such as windings, the parts that conduct magnetic flux, screws, construction parts such as housing and covers are divided into parts again.

The approximate lifetime of an electric motor used at the right power and in the right structure is accepted as 10 years.

The service life of motors can end in two ways:

1- Burning of the motor, damage to the components, quality problems caused by incorrect rewinding and repair processes, decrease in energy efficiency, etc. reasons or as a necessity when its use is prohibited by regulations.

2- To achieve regulatory compliance, low-carbon production, energy and sustainability targets, and to enable inefficient motors to be used for higher energy prefer to replace them with motors with higher efficiency.

WHAT IS RECYCLING?

Recycling is the process of reusing waste materials in order to avoid wasting potentially valuable materials, reduce raw material consumption and energy use into usable objects.

WHY IS IT IMPORTANT?

Recycling makes many contributions to the environment and the economy.

- Natural resources are protected.
- Recycling reduces the need to extract raw materials for new products.
- Greenhouse gas emissions are reduced.
- Greenhouse gas emissions caused by landfilling of waste and raw material extraction are prevented.
- Energy consumption is reduced.
- Savings are achieved in the energy used for raw material extraction and processing.

MANAGEMENT OF WASTE MOTORS AND PARTS

HOW IS THE RECYCLING PROCESS CARRIED OUT?

Although the recycling process generally differs according to commodity and region, the basic steps can be expressed as collection, processing and remanufacturing into a new product.

Collection: Wastes are collected separately at source by the generator and temporarily stored in accordance with local regulations. It is sent by licensed carriers to be sent to the waste processing facility that meets the conditions according to the waste and regulatory requirements.

Processing: Recyclables are transported by the licensed collector to the recovery facility or storage facility. At the processing facility, recyclables are separated by subjecting them to the relevant separation methods. Prepared for transportation directly to a production facility.

Recycling: The separated raw materials are subjected to processes according to the content and raw materials are obtained.

Re-production: After all necessary processes are completed, recyclable materials are transformed into new products in recycling facilities.

WHAT ARE THE WASTE STAGES FOR MOTORS?

Electric motors can be subjected to the following processes before they become waste:

Waste Motor and/or parts → **Reuse/recycling:** Replacement of parts of the electric motor that are not of suitable quality. → **Recycling/recovery:** The engine is separated into all its parts and taken to recycling/recovery processes to be treated with the appropriate waste code. → Raw Material

Attention! Rewinding is not recommended for electric motors. Rewinding of the motor can cause energy losses, especially rewinding and other incorrect techniques that do not follow the original design of the motor can greatly reduce the efficiency of electric motors, as well as cause thermal damage and problems such as high vibration, so rewinding after failure isn't recommended.

WHAT IS THE MANAGEMENT PLAN FOR MOTOR WASTE?

Waste motors should be kept in temporary waste storage at the generator's facility and marked with the appropriate waste code. According to legal requirements, waste generators have the right to store the waste they produce on their premises for 6 months. Within this period, or preferably before, they are obliged to send it to waste transportation and processing facilities licensed for the designated waste codes. The vehicle transferring the waste must have the necessary license for the relevant waste code.

WHICH WASTE CODES CAN BE USED FOR THE MANAGEMENT OF WASTE MOTORS?

Within the scope of the Waste Management Regulation, the different waste codes given below are considered appropriate for waste motors.

Electric motors have a complicated structure including different types of metals, plastic parts, oils, etc. Since motors contain 97% recyclable materials, at the end of their life, the contribution of waste to the circular economy should be preserved and evaluated within the scope of local and international legislation. Waste engines and parts must be delivered to licensed waste collection/separation/recycling facilities. Waste motors and parts are subjected to the following pre-treatments at licensed facilities.

- Proper treatment of valuable parts for recycling.
- Removal and disposal of hazardous parts, if any.

Waste Code	Waste Management Regulation Waste Description	Description
16 02 16	16 02 15 parts removed from discarded equipment other than 15	Waste motor
16 02 16	16 02 15 parts removed from discarded equipment other than 15	Various motor parts
16 02 15*	Dangerous parts removed from discarded equipment	Waste motor in the presence of hazardous contamination
16 02 15*	Dangerous parts removed from discarded equipment	Various motor parts in the presence of hazardous contamination
19 12 XX	-	Wastes from waste treatment plants where waste motors will be treated/pre-treated

OUR SERVICES

As WAT, we carry out Motor Conversion Projects, which include the replacement of inefficient electric motors used in industry that consume high energy with energy efficient ones, and provide expertise support for the right feasibility and high contribution to our industry.

Our aim and services with these projects:

- Reducing the high electricity consumption caused by inefficient motors in the industry, reducing the electricity bills of enterprises and increasing total efficiency.
- Conducting field measurements in enterprises for electric motors, system efficiency and energy efficiency feasibility studies.
- Providing technical support for the selection of high energy efficient, low carbon motors for the different needs of businesses.
- Providing services to businesses to benefit from KOSGEB Grants and Leasing financing services.
- Reducing the total cost of replacement by converting the waste motor into commercial value.
- Provide support for an appropriate waste management model to bring inefficient motors with 97% recycling potential into the circular economy.
- Contributing to Turkey's climate goals.

WAT Motor Sanayi ve Ticaret A.Ş. reserves the right
to alter any data given in this catalogue.

WAT MOTOR SANAYİ VE TİCARET A.Ş.
KARAAĞAÇ MAHALLESİ 8. SOKAK NO: 4 A/2
KAPAKLI 59510 TEKİRDAĞ, TURKEY