WAT Motor
Sanayi ve Ticaret A.Ş.

Three Phase Squirrel Cage Induction Motor

Motor Type: **Q3HFB132M8C**

Electrical Data

RATED VALUES							STARTING VALUES				BREAKDOWN	EFFICIENCY			EFFICIENCY CLASS
VOLTAGE	POWER		SPEED	CURRENT	TORQUE	Cos Φ	CURRENT I_A / I_N		TORQUE M_A / M_N		TORQUE Mk/ Mn				IEC 60034-30-1
V	kW	Hz	rpm	A	Nm	4/4	Y	D	Y	D	Nm	4/4	3/4	2/4	IE
230/400	2,2	50	730	10,7/6,16	28,8	0,61	4,4		1,7		2,5	81,9	81,6	79	IE3
265/460	2,2	60	882	9,4/5,4	23,8	0,58	4,2		1,9		3,2	85,5	85,4	83,2	IE3

Mechanical Data

Bearing DE	6208-ZZ	*Color*	Optional
Bearing NDE	6208-ZZ	*Motor protection*	Optional
Lubricants	Shell Gadus S5 V220-2	*Method of cooling*	IC 411
Condensation drain hole	No	*Terminal box position*	Top
External earthing terminal	Yes	*Material of terminal box*	Aluminium
Vibration class	A	*Terminal plate thread*	M6
Insulation class	F	*Cable gland*	1xM32
Duty type	S1	*Clamping range*	18-25 mm
Direction of rotation	Clockwise	*Mounting type*	IM 3601 (B14-B)
Housing material	Aluminum		
Type of balancing	Half Key		

Enviromental Data

Ambient temperature	-20 / + 40 °C
Altitude above sea level	1000 m

Others

Type of protection		IP56
Sound pressure level 50/60Hz	dBA	73
Moment of inertia (kgm ^{2})		0,03052
Standard		IEC 60034-1
Weight (kg)		52,6

Dimensions

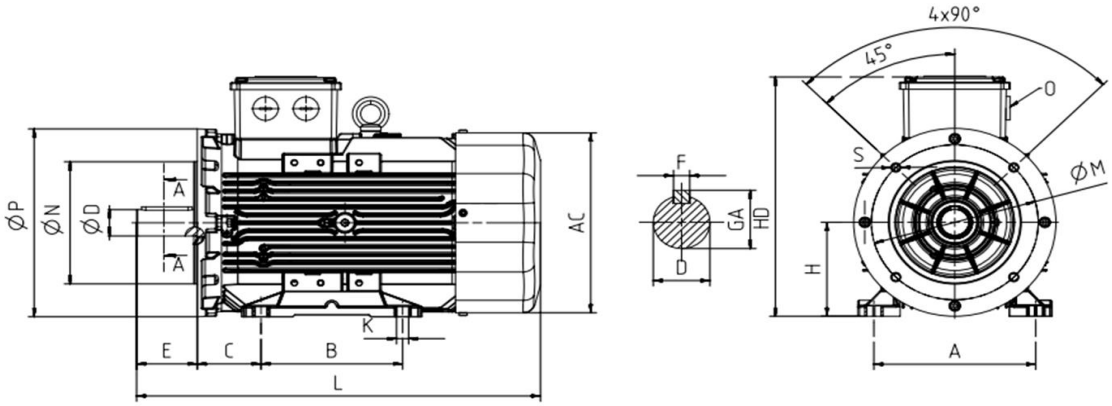

Main Dimensions		Foot Mounted Motors						Shaft				Flange Mounted Motors			
AC	**L**	**B**	**A**	**H**	**HD**	**K**	**C**	**D**	**E**	**GA**	**F**	**P**	**N**	**M**	**S**
260	481	–	–	–	–	–	–	38	80	41	10	250	180	215	M12

Sensitivity: Confidential