WAT Motor
Sanayi ve Ticaret A.Ş.

Smoke Extraction Motor F400 2 Hour EN 12101-3

Motor Type: **S4HG280M4C40-KG**

Electrical Data

RATED VALUES							STARTING VALUES				BREAKDOWN	EFFICIENCY			EFFICIENCY CLASS
VOLTAGE	POWER		SPEED	CURRENT	TORQUE	Cos Φ	CURRENT I_A / I_N		TORQUE M_A / M_N		TORQUE Mk/ Mn				IEC 60034-30-1
V	kW	Hz	rpm	A	Nm	4/4	Y	D	Y	D	Nm	4/4	3/4	2/4	IE
400/690	75	50	1492	127,9/73,9	480,0	0,89		5,9		1,7	4,3	IE4-96,0	95,8	95,1	IE4
460/795	75	60	1793	108,8/62,9	399,4	0,90		7,1		2,1	3,3	IE4-96,2	96,0	95,3	IE4

Mechanical Data

Bearing DE	6317 ACIK C4 YOK ORS	*Color*	Optional
Bearing NDE	6317 ACIK C4 YOK ORS	*Motor protection*	Optional
Lubricants	Dupont GPL 226 Krytox (260 C°)	*Method of cooling*	IC 418
Condensation drain hole	No	*Terminal box position*	Top
External earthing terminal	Yes	*Material of terminal box*	Cast Iron
Vibration class	A	*Cable gland*	M50x1.5
Insulation class	H	*Clamping range*	34-44
Duty type	S1	*Mounting type*	IM 1001 (B3)
Direction of rotation	Clockwise		
Housing material	Cast Iron		
Type of balancing	Half Key		

Enviromental Data

Ambient temperature	-20 / + 40 °C
Altitude above sea level	1000 m

Others

Type of protection		IP56
Sound pressure level 50/60Hz	dBA	70
Moment of inertia (kgm ^{2})		1,7210
Standard		IEC 60034-1
Weight (kg)		694,0
Resistance to fire		400 C° 2 Hour F400 EN 12101-3

Dimensions

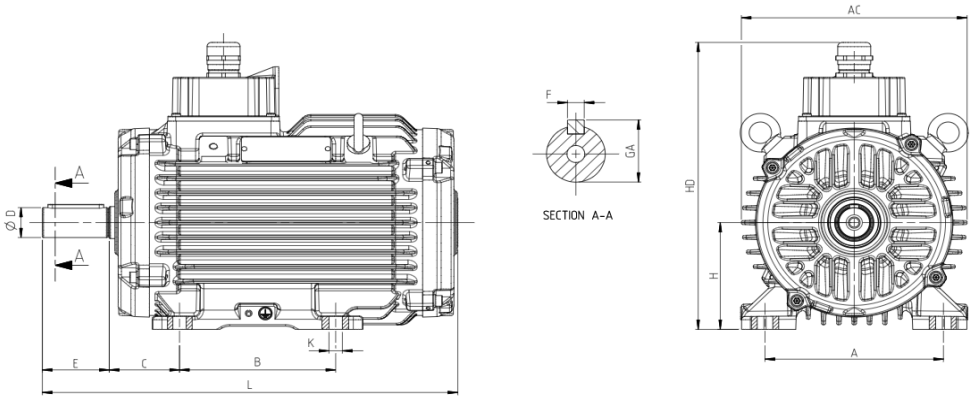

Main Dimensions		Foot Mounted Motors						Shaft				Flange Mounted Motors			
AC	L	B	A	H	HD	K	C	D	E	GA	F	P	N	M	S
574	913	419	457	280	658	24	190	75	140	79,5	20				

Sensitivity: Confidential